THE KING OF SNOW®

921 Series Sno-Thro®

Owner/Operator Manual
Manuel Du Propriétaire/Utilisateur

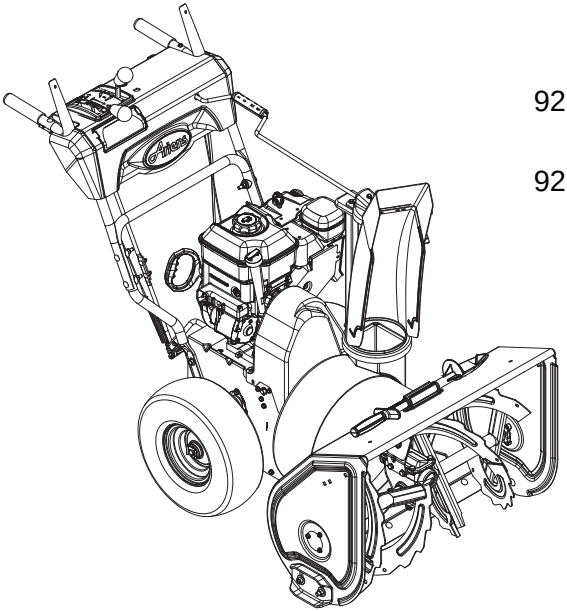

Models

921023 – Deluxe 28 Track
(SN 095000 – 099,999)

921024 – Deluxe 24
(SN 000101 – 099,999)

921028 – Deluxe 24 Platinum
(SN 000101 +)

921029 – Deluxe 30 Platinum
(SN 000101 – 099,999)

921030 – Deluxe 28
(SN 000101 – 099,999)

921032 – Deluxe 30
(SN 000101 – 099,999)

921035 – Deluxe 28
(SN 000101 +)

921036 – Deluxe 28
(SN 000101 +)

921037 – Deluxe 28
(SN 016,101 +)

E10 E15 E20 E85

The use of any gasoline exceeding 10% ethanol (E10) or 10% MTBE will void the product warranty.
L'utilisation d'une essence contenant plus de 10% d'éthanol (E10) ou de 10% de MTBE annulent la garantie.

EN ENGLISH
FR FRANÇAIS

04585100F • 2/14
Printed in USA

TABLE OF CONTENTS

SAFETY 4
ASSEMBLY 9
CONTROLS and FEATURES 17
OPERATION 19
MAINTENANCE 26
SERVICE AND ADJUSTMENTS 30
STORAGE 38
SERVICE PARTS 40
ACCESSORIES. 40
TROUBLESHOOTING 39
SPECIFICATIONS. 41
WARRANTY 44

INTRODUCTION

MANUALS

Before operation of unit, carefully and completely read your manuals. If used improperly, this unit could be dangerous and cause personal injury or property damage. The contents will provide you with safety instructions for the safe use of your unit during normal operation and maintenance.

All reference to left, right, front, or rear are given from operator standing in operation position and facing the direction of forward travel.

ENGINE MANUAL

The engine on this unit is covered by a separate manual specific to the engine. This manual is included in the literature package that shipped with the unit. Refer to this manual for engine service recommendations. If the engine manual is not available, contact the engine manufacturer for a replacement manual.

MODEL AND SERIAL NUMBERS

When ordering replacement parts or making service inquiries, know the Model and Serial numbers of your unit and engine.

Numbers are located on the product registration form in the unit literature package. They are printed on a serial number label, located on the frame of your unit.

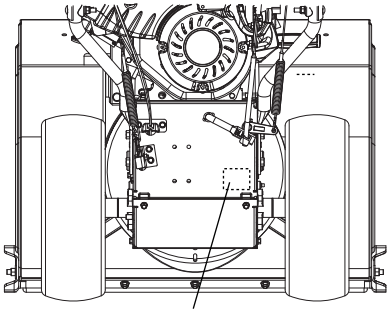

Figure 1

- Record unit model and serial numbers here.

- Record engine model and serial numbers here.

PRODUCT REGISTRATION

The Ariens dealer must register the product at the time of purchase. Registering the product will help the company process warranty claims or contact you with the latest service information. All claims meeting requirements during the limited warranty period will be honored, whether or not the product registration card is returned. Keep a proof of purchase if you do not register your unit.

Customer Note: If the dealer does not register your product, please fill out, sign, and return the product registration card to Ariens or go to www.ariens.com.

UNAUTHORIZED REPLACEMENT PARTS

Use only Ariens replacement parts. The replacement of any part on this vehicle with anything other than an Ariens authorized replacement part may adversely affect the performance, durability, or safety of this unit and may void the warranty. Ariens disclaims liability for any claims or damages, whether warranty, property damage, personal injury or death arising out of the use of unauthorized replacement parts. To locate your nearest Ariens Dealer, go to www.ariens.com on the Internet.

DISCLAIMER

Ariens reserves the right to discontinue, make changes to, and add improvements upon its products at any time without public notice or obligation. The descriptions and specifications contained in this manual were in effect at printing. Equipment described within this manual may be optional. Some illustrations may not be applicable to your unit.

DELIVERY

Customer Note: If you have purchased this product without complete assembly and instruction by your retailer, it is your responsibility to:

1. Read and understand all assembly instructions in this manual. If you do not understand or have difficulty following the instructions, contact your nearest Ariens Dealer for assistance. Make sure all assembly has been properly completed.

NOTICE: To locate your nearest Ariens Dealer, go to www.ariens.com on the Internet.

WARNING: Improper assembly or adjustments can cause serious injury.

2. Understand all Safety Precautions provided in the manuals.
3. Review control functions and operation of the unit. Do not operate the Sno-Thro unless all controls function as described in this manual.
4. Review recommended lubrication, maintenance and adjustments.
5. Review Limited Warranty Policy.
6. Fill out a Product Registration Card and return the card to the Ariens Company or go to www.ariens.com.

WARNING: To avoid injury to hands and feet, always disengage clutches, shut off engine, and wait for all movement to stop before unclogging or working on snow thrower.

Hand contact with the rotating impeller is the most common cause of injury associated with snow throwers. Never use your hand to clean out the discharge chute.

Keep hands and feet away from auger and impeller.

SAFETY ALERTS

Look for these symbols to point out important safety precautions. They mean:

Attention!

Personal Safety Is Involved!

Become Alert!

Obey The Message!

The safety alert symbols above and signal words below are used on decals and in this manual. Read and understand all safety messages.

DANGER: IMMINENTLY HAZARDOUS SITUATION! If not avoided, WILL RESULT in death or serious injury.

WARNING: POTENTIALLY HAZARDOUS SITUATION! If not avoided, COULD RESULT in death or serious injury.

CAUTION: POTENTIALLY HAZARDOUS SITUATION! If not avoided, MAY RESULT in minor or moderate injury. It may also be used to alert against unsafe practices.

NOTATIONS

NOTICE: General reference information for proper operation and maintenance practices.

IMPORTANT: Specific procedures or information required to prevent damage to unit or attachment.

PRACTICES AND LAWS

Practice usual and customary safe working precautions, for the benefit of yourself and others. Understand and follow all safety messages. Be alert to unsafe conditions and the possibility of minor, moderate, or serious injury or death. Learn applicable rules and laws in your area. Always follow the practices set forth in this manual.

REQUIRED OPERATOR TRAINING

Original purchaser of this unit was instructed by the seller on safe and proper operation. If unit is to be used by someone other than original purchaser; loaned, rented or sold, ALWAYS provide this manual and any needed safety training before operation.

SAFETY DECALS AND LOCATIONS

ALWAYS replace missing or damaged Safety Decals. Refer to Figure 2 below for Safety Decal locations.

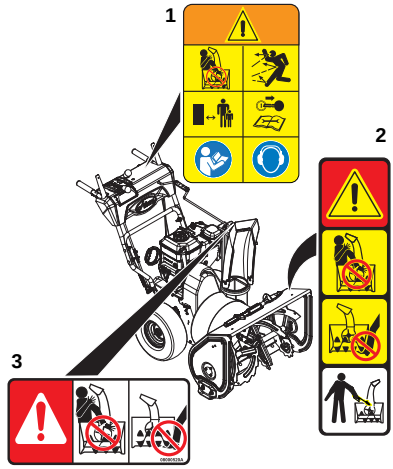

Figure 2

1. DANGER!

Danger!

ONLY use clean-out tool to clear blockages. NEVER use your hands.

Never direct discharge towards persons or property that may be injured or damaged by thrown objects.

Keep people away from unit while operating. Keep children out of work area and under watchful care of a responsible adult.

Stop engine, remove key, read manual before making any repairs or adjustments.

Read Owner/Operator Manual.

Wear appropriate hearing protection.

2. DANGER!

Danger!

ROTATING PARTS! ONLY use clean-out tool to clear blockages. NEVER use your hands. **High speed impeller rotates below discharge opening. Wait for all moving parts to stop before removing clogs or servicing.**

3. DANGER!

Danger!

ROTATING PARTS.
Keep clear of auger while engine is running.

- Read Operator's Manual.
- Allow operation only by properly trained adult, never children.
- Stop engine and remove ignition key prior to leaving the operator's position for any reason.
- Keep all controls, guards and safety devices properly serviced and functional.
- Never direct discharge towards persons or property that may be injured or damaged by thrown objects.

EMISSION CONTROL SYSTEM

This equipment and/or its engine may include exhaust and evaporative emissions control system components required to meet U.S. Environmental Protection Agency (EPA) and/or California Air Resources Board (CARB) regulations. Tampering with emission controls and components by unauthorized personnel may result in severe fines or penalties. Emission controls and components can only be adjusted by an Ariens Company dealer or an authorized engine manufacturer's service center. Contact your Ariens Company Equipment Retailer concerning emission controls and component questions.

SAFETY RULES

Read, understand, and follow all safety practices in Owner/Operator Manual before beginning assembly or operating. Failure to follow instructions could result in personal injury and/or damage to unit.

ALWAYS remove key and/or wire from spark plug before assembly, maintenance or service. Unintentional engine start up can cause death or serious injury.

Complete a walk around inspection of unit and work area to understand:

- Work area
- Your unit
- All safety decals

ALWAYS check overhead and side clearances carefully before operation. ALWAYS be aware of traffic when operating along streets or curbs.

Keep children and people away. Keep children out of work area and under watchful care of a responsible adult.

NEVER allow children to operate or play on or near unit. Be alert and shut off unit if children enter area.

DO NOT allow adults to operate unit without proper training. Only trained adults may operate unit. Training includes actual operation.

Keep area of operation clear of all toys, pets, and debris. Thrown objects can cause injury.

Check for weak spots on docks, ramps or floors. Avoid uneven work areas and rough terrain. Stay alert for hidden hazards.

DO NOT operate near drop-offs, ditches, or embankments. Unit can suddenly turn over if a wheel is over the edge of a cliff or ditch, or if an edge caves in.

Falling snow, fog, etc. can reduce vision and cause an accident. Operate unit only when there is good visibility and light.

NEVER operate unit after or during the use of medication, drugs or alcohol. Safe operation requires your complete and unimpaired attention at all times.

NEVER allow anyone to operate this unit when their alertness or coordination is impaired.

DO NOT operate unit without wearing adequate winter outer garments. Wear adequate safety gear, including safety glasses with side shields, and protective gloves. Wear proper footwear to improve footing on slippery surfaces.

DO NOT wear loose clothing or jewelry and tie back hair that may get caught in rotating parts.

Protect eyes, face and head from objects that may be thrown from unit. Wear appropriate hearing protection.

Avoid sharp edges. Sharp edges can cut. Moving parts can cut off fingers or a hand.

ALWAYS keep hands and feet away from all rotating parts during operation. Rotating parts can cut off body parts.

NEVER place your hands or any part of your body or clothing inside or near any moving part while unit is running.

ALWAYS keep hands away from all pinch points.

DO NOT touch unit parts which might be hot from operation. Allow parts to cool before attempting to maintain, adjust or service.

Never direct discharge towards persons or property that may be injured or damaged by thrown objects. Use extreme caution on gravel surfaces. Stay alert for hidden hazards or traffic. Adjust Skid Shoes so Scraper Blade does not contact gravel.

DO NOT throw snow any higher than necessary.

Deflected materials can cause injury and property damage.

Always stand clear of the discharge area when operating this unit.

Fumes from engine exhaust can cause injury or death. DO NOT run engine in an enclosed area. Always provide good ventilation.

ALWAYS disengage attachment, stop unit and engine, remove key and allow moving parts to stop before leaving operator’s position.

ROTATING AUGER CAN CAUSE SERIOUS INJURY. NEVER ATTEMPT TO UNCLOG OR CLEAN UNIT WHILE ENGINE IS RUNNING.

Read, understand, and follow all instructions in the manual and on the machine before starting.

Understand:

- How to operate all controls.
- The functions of all controls.
- How to STOP in an emergency.

Before starting engine, disengage control(s).

Use only approved extension cords and receptacles when starting units equipped with electric starter. DO NOT connect electric starter cord to any wiring system that is not a three-wire grounded system.

ALWAYS allow unit and engine to adjust to outdoor temperatures before clearing snow.

DO NOT overload the machine capacity by attempting to operate or to clear snow at too fast a rate.

Slow down and turn corners slowly.

Do not operate in reverse unless absolutely necessary. ALWAYS back up slowly. Always look down and behind before and while backing.

Disengage attachment drive when traveling from one work area to another.

Abnormal Vibrations are a warning of trouble. Striking a foreign object can damage unit. Immediately stop unit and engine. Remove key and wait for all moving parts to stop. Remove wire from spark plug. Inspect unit and make any necessary repairs before restart.

Before cleaning, removing clogs or making any inspections, repairs, etc.: disengage clutch(es), stop unit and engine, remove key, allow moving parts to stop. Allow hot parts to cool.

Run unit a few minutes after clearing snow to prevent freeze-up of attachment.

Disengage attachment when not in use. Disengage all clutches before starting engine. Adjust skid shoes to clear gravel or crushed rock surfaces safely.

Never leave a running unit unattended. ALWAYS shut off engine before leaving unit. ALWAYS remove key to prevent unauthorized use.

Never carry passengers.

Check clutch and brake operation frequently. Adjust and service as required. All motion of drive wheels and auger/impeller must stop quickly when control levers are released.

DO NOT operate on steep slopes. DO NOT clear snow across the face of slopes. Keep all movement on slopes slow and gradual. DO NOT make sudden changes in speed or direction. Use a slow speed to avoid stops or shifts on slopes. Avoid starting or stopping on a slope.

DO NOT park unit on a slope unless absolutely necessary. When parking on a slope always block the wheels.

ALWAYS shut off engine, remove key, and close fuel shut-off valve or drain fuel when transporting unit on a truck or trailer.

Use extra care when loading or unloading unit onto trailer or truck.

Secure unit chassis to transport vehicle. NEVER secure from rods or linkages that could be damaged.

DO NOT transport machine while engine is running.

Keep unit free of ice or other debris. Clean up oil or fuel spills.

This product is equipped with an internal combustion type engine. DO NOT use unit on or near any unimproved, forest-covered or brush covered land unless exhaust system is equipped with a spark arrester meeting applicable local, state or federal laws. A spark arrester, if it is used, must be maintained in effective working order by operator.

Fuel is highly flammable and its vapors are explosive. Handle with care. Use only an approved gasoline container with an appropriately sized dispensing spout.

NO smoking, NO sparks, NO flames. ALWAYS allow engine to cool before servicing.

NEVER fill fuel tank when engine is running or hot from operation.

NEVER fill or drain fuel tank indoors.

Replace fuel cap securely and clean up spilled fuel.

Never fill containers inside a vehicle or on a truck or trailer bed with a plastic liner. Always place containers on the ground away from your vehicle before filling.

When practical, remove gas-powered equipment from the truck or trailer and refuel it on the ground. If this is not possible, then refuel such equipment on a trailer with a portable container, rather than from a gasoline dispenser nozzle.

Keep the nozzle in contact with the rim of the fuel tank or container opening at all times until fueling is complete. Do not use a nozzle lock-open device.

If fuel is spilled on clothing, change clothing immediately.

Properly remove fuel before tipping unit up onto housing, so no spills will occur.

Secure unit so it will not tip over during maintenance.

ALWAYS keep protective structures, guards, and panels in good repair, in place and securely fastened. NEVER modify or remove safety devices.

DO NOT change engine governor settings or over-speed engine.

Fumes from engine exhaust can cause injury or death. DO NOT run engine in an enclosed area. Always provide good ventilation.

ALWAYS maintain unit in safe operating condition. Damaged or worn out muffler can cause fire or explosion.

Keep all hardware properly tightened. Check shear bolts frequently.

Maintain or replace safety and instruction labels, as necessary.

NEVER store unit with fuel in fuel tank, inside a building where any ignition sources are present such as hot water heaters, space heaters, or clothes dryers. Allow the engine to cool before storing in any enclosure.

Shut off fuel and allow engine to cool completely before storing in closed area or covering unit.

For extended storage, clean unit thoroughly. See Engine Manual for proper storage.

Use only attachments or accessories designed for your unit.

Check components frequently. If worn or damaged, replace with manufacturer’s recommended parts.

ASSEMBLY

WARNING: AVOID INJURY. Read and understand the entire *Safety* section before proceeding.

WARNING: Dropping or tipping over boxed unit could result in personal injury or damage to unit.

Check the contents of your package for the parts listed below (Figure 3):

Item	Part No.	Qty	Description
The following parts are included as part of the Sno-thro Unit:			
1.	N/A	1	Sno-thro Unit
2.	07028500	2	3/8" x 3/4" Hex Head Serrated Flange Grade 5 Bolt
The following parts are included as a part of the Lower Handlebar:			
3.	00597451	1	Lower Handlebar
4.	06221600	4	5/16" x 2-1/4" Round Head Square Neck Grade 5 Bolt
5.	07500005	4	Handlebar Spacer
6.	06435700	4	Flat Steel Washer
7.	06307400	4	Locking Washer
8.	06530200	4	5/16" Nyloc Nut
9.	N/A	1	Upper Handlebar Assembly
10.	N/A	1	Discharge Chute Assembly
11.	N/A	1	Chute Crank Assembly
12.	N/A	1	Literature Pack
13.	06900510	1	Trigger Cable Assembly (Model 921023)
14.	06100007	1	1/4" x 1-1/2 Oval Head Machine Screw (Model 921023)
15.	06305200	1	1/4" Locking Washer (Model 921023)
16.	02483859	2	Skid Shoe, Reversible (Models 921029, 032)
17.	06212000	4	Bolt, Round Head Square Neck .38-16 x 1.00 (Models 921029, 032)
18.	06435900	4	Washer, Flat Steel .438 x 1.00 x .083 (Models 921029, 032)
19.	06529600	4	Nut, Locking, Center, .38-16 (Models 921029, 032)

If any of the contents listed are missing contact your local Ariens dealer. Use only Ariens approved parts; unapproved parts may void the unit warranty.

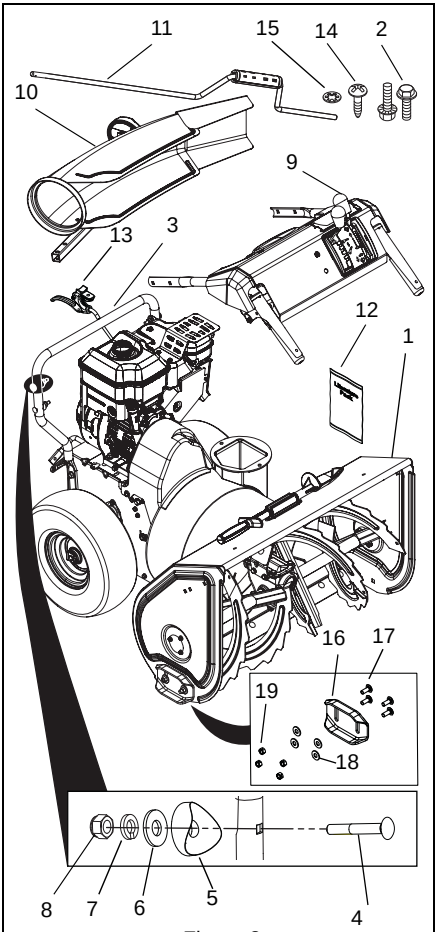

Figure 3

ASSEMBLY

Tools Required

- Pliers
- Open-End Wrenches: 3/8, 7/16, 1/2, 9/16" and/or Adjustable Wrench
- Tire Gauge
- Torque Wrench (Optional)
- Phillips Screwdriver

Unfold Lower Handlebar

(Figure 4)

IMPORTANT: Be sure to block wheels or secure unit so it does not move during assembly.

1. Rotate lower handlebar out from unit so lower handlebar mounting holes align with mounting holes on the unit frame (Figure 4).

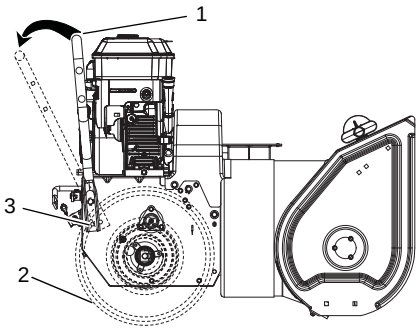

1. Lower Handlebar
2. Wheel
3. Mounting Hole

Figure 4

2. Secure lower handlebar to unit using two 3/8" x 3/4" hex head serrated flange grade 5 bolts (Figure 3, Item 2)
3. Tighten all four bolts to 25 – 42 lbf-ft (33.9 – 56.9 N•m).

Attach Upper Handlebar Assembly

(Figures 5 and 6)

1. Attach upper handlebar assembly to lower handlebar using two sets of the handlebar hardware. One set to attach each side of the handlebars (Figure 5).

NOTICE: DO NOT tighten hardware. Allow upper handlebar assembly to hang from the lower handlebars for the next step (Figure 5).

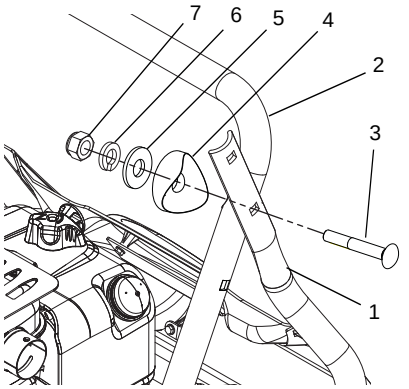

1. Upper Handlebar Assembly
2. Lower Handlebar
3. 5/16" x 2-1/4" Round Head Square Neck Grade 5 Bolt
4. Handlebar Spacer
5. Flat Steel Washer
6. Locking Washer
7. 5/16" Nyloc Nut

Figure 5

2. Hook spring end of attachment control cable to the clutch arm.
3. Hook spring end of the traction control cable to the cable eyelet on back of frame.

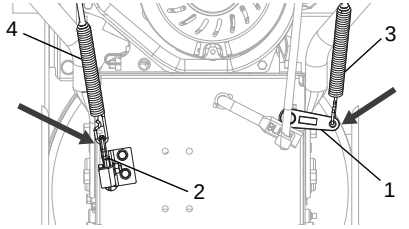

1. Clutch Arm
2. Cable Eyelet
3. Attachment Control Cable
4. Traction Control Cable

Figure 6

Unfold Upper Handlebar Assembly

(Figures 7 and 8)

1. Rotate the handlebar into operating position.

NOTICE: Be careful not to damage cable spring hooks when rotating handlebar upward.

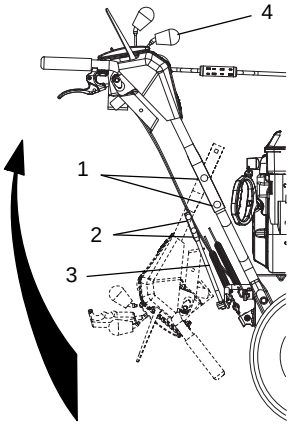

1. Handlebar Hardware
2. Shift Rod Hardware
3. Shift Rod
4. Speed Selector Lever

Figure 7

2. Install the remaining handlebar hardware attaching the upper handlebar assembly to the lower handlebar (Figure 5).
3. Tighten all hardware.
4. Remove packaging around shift rod.
5. Rotate shift rod into place and tighten hardware.
6. Connect shift rod to speed selector arm and adjust as specified in *Speed Selector Adjustment* on page 31.
7. Adjust attachment cable as specified in *Attachment Clutch/Brake Adjustment* on page 32.
8. Adjust the traction cable as specified in *Traction Drive Clutch Adjustment* on page 34.

Connect Headlight Wire Harness

(Figure 8)

NOTICE: The headlight wire harness comes attached to the upper handlebar assembly.

1. Route the wire harness along the interior of the right side handlebar.
2. Connect to the engine electrical plug.

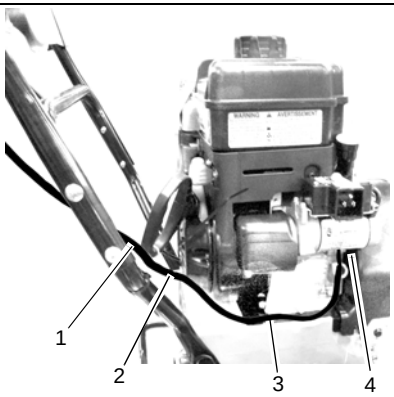

1. Wire Harness
2. Cable Tie
3. Cable Anchor
4. Engine Electrical Plug

Figure 8

3. Press cable anchor into mounting hole in the frame near the engine electrical plug.
4. Secure the wire harness to the handlebars using the cable ties attached to the wire harness.

Install Trigger Cable Assembly (Model 921023)

(Figure 9)

NOTICE: Trigger cable assembly comes attached to the Sno-thro unit.

1. Attach remote trigger cable assembly to upper handlebar assembly using one 1/4" x 1-1/2 oval head machine screw (Figure 3, Item 14) and one 1/4" locking washer (Figure 3, Item 15) (Figure 9).

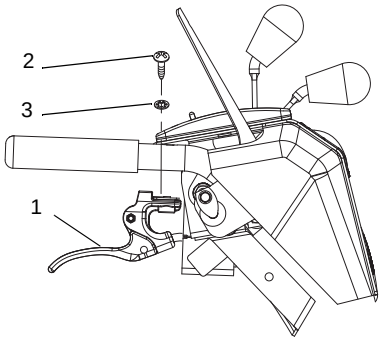

1. Trigger Cable Assembly
2. Oval Head Machine Screw
3. Internal Locking Washer

Figure 9

Install Discharge Chute and Discharge Chute Crank

(Models 921023, 024, 030, 032, 035, 036, 037)

(Figures 10 and 11)

1. Grease underside of discharge chute ring (if not already greased).
2. Remove mounting hardware from auger housing (Figure 10).
3. Install discharge chute over opening in the auger housing. Finger tighten the mounting hardware removed in step 2.

NOTICE: Leave discharge chute pedestal loose to help install the chute crank.

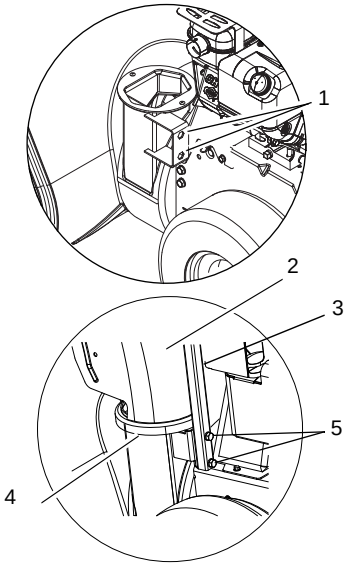

1. Mounting Holes
2. Discharge Chute
3. Chute Pedestal
4. Discharge Chute Ring
5. Mounting Hardware

Figure 10

4. Insert the short end of the chute crank into the hole in the front of the control panel.

NOTICE: Be careful not to damage nylon bushing when attaching crank to the control panel.

5. Connect the chute crank to the pinion gear on chute with hairpin.

Models 921023, 024, 030, 032, 035, 036, 037

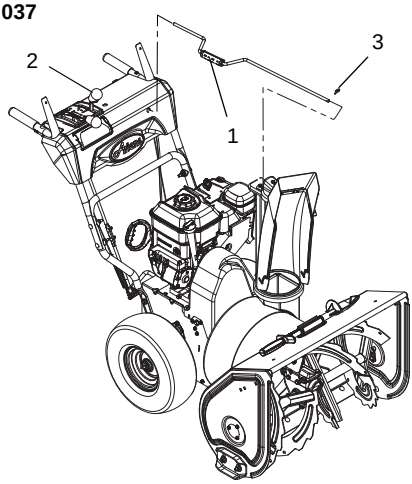

1. Chute Crank
2. Control Panel
3. Hairpin

Figure 11

6. Orient the chute and pedestal to its most vertical position and tighten pedestal hardware to 15 – 31 lbf-ft (20 – 42 N•m) (Figure 10).

Install Discharge Chute, Chute Control and Chute Rod (Models 921028, 029)

(Figures 12, 13 and 14)

1. Grease underside of discharge chute ring (if not already greased).
2. Remove mounting hardware from auger housing.
3. Install discharge chute over opening in the auger housing. Finger tighten the mounting hardware removed in step 2.

NOTICE: Leave discharge chute pedestal loose to help install the chute rod.

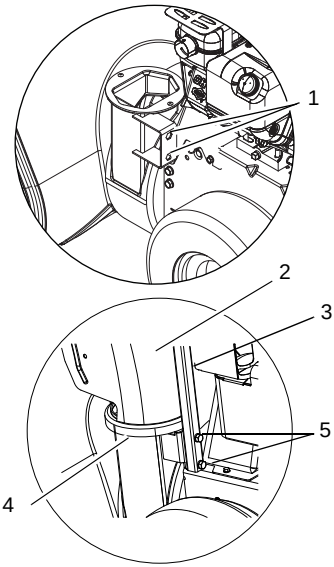

1. Mounting Holes
2. Discharge Chute
3. Chute Pedestal
4. Discharge Chute Ring
5. Mounting Hardware

Figure 12

4. Remove the gear cover from top of chute pedestal.
5. Release the lock arm on the gear assembly with your finger and rotate the discharge chute so it points straight ahead.

NOTICE: Make sure alignment markers on gear assembly are lined up when discharge chute is pointing straight ahead.

6. Remove rubber grommet from control panel.
7. Make sure the chute control cable is routed between the lower handlebar and the bottom of the control panel, insert control assembly into slot in control panel from below and install assembly into nylon bushing in control panel. See Figure 13.
8. Reinstall rubber grommet over control assembly knob and into control panel.

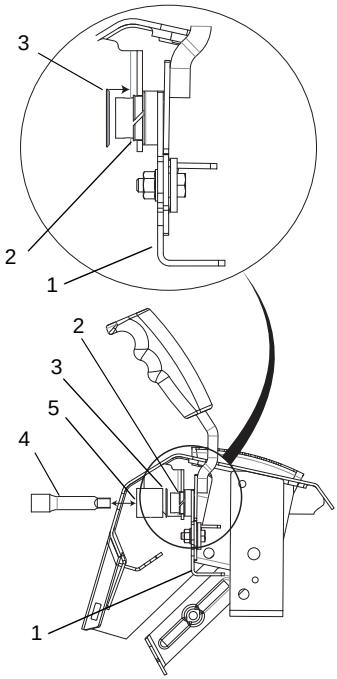

1. Control Assembly
2. Nylon Bushing
3. Push Nut
4. Socket Extension (Optional)
5. Socket, 3/4"

Figure 13

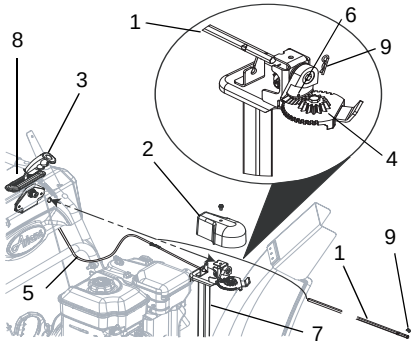

1. Chute Rod
2. Gear Cover
3. Control Assembly
4. Gear Assembly
5. Chute Control Cable
6. Alignment Marker
7. Chute Pedestal
8. Rubber Grommet
9. Hair Pin

Figure 14

NOTICE: To ensure the discharge chute follows its full range of travel, make sure the control lever is centered in the slot and pointing straight up before installing the chute rod.

9. Insert chute rod end without ears into control lever and slide into control panel until opposite end of rod clears the gear assembly.
10. Align end of chute rod with hex hole in gear assembly and insert until ears hit gear.
11. Insert hairpin into hole in chute rod near gear assembly.
12. Hook the chute control cable onto the chute rod.

IMPORTANT: The chute control cable hook will prevent the cable from contacting the engine or muffler guard. Make sure this cable stays connected while unit is in operation.

13. Check to make sure the chute control cable ends are properly seated in control assembly and lock arm.
14. Adjust control cable as necessary to remove cable slack. Be sure lock arm is fully seated in gear teeth.
15. Replace gear cover on top of chute pedestal.

16. Orient the chute and pedestal to its most vertical position and tighten pedestal hardware to 15 – 31 lbf-ft (20 – 42 N•m).
17. Make sure the discharge chute rotates left and right when you push the discharge chute control lever left and right.

NOTICE: If chute does not stay in position, adjust as directed in *Discharge Chute* on page 31 or repair before operation.

Remote Deflector Control

(Figure 15)

NOTICE: Connect the barrel cable end to the chute deflector cable anchor before clipping the cable to the discharge chute cable bracket.

1. Route deflector cable along the left side of the chute pedestal.
2. Insert the barrel cable end into the bracket on left side of chute deflector (Figure 15).
3. Hold seal out of the way while routing the cable through the bracket on the left side of the discharge chute, and then push the cable fitting into the bracket.
4. Push the seal securely over the end of the cable fitting to prevent water from entering the cable.
5. Check deflector travel. Adjust nut on cable end under control panel to obtain full travel, if necessary (see *Remote Deflector Control Adjustment* on page 30).

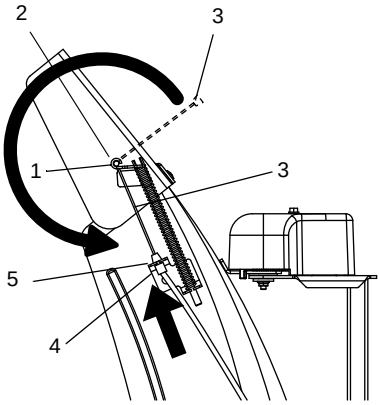

1. Chute Deflector Cable Anchor
2. Barrel Cable End
3. Deflector Cable
4. Cable Fitting
5. Discharge Chute Cable Bracket

Figure 15

Install Skid Shoes (Models 921029, 032)

(Figure 16)

1. Remove hardware from skid shoes.
2. Install hardware through blower housing and skid shoe as shown.
3. Adjust skid shoes (see *Skid Shoes* on page 30).

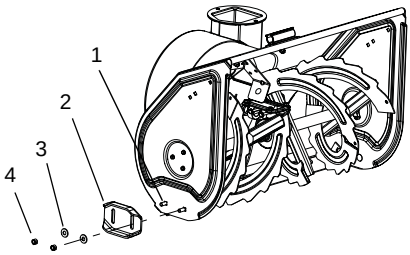

1. Bolt, Round Head Square Neck .38-16 x 1.00
2. Skid Shoe, Reversible
3. Washer, Flat Steel .438 x 1.00 x .083
4. Nut, Locking, Center, .38-16

Figure 16

Check Function of Dual Handle Interlock

Without the engine running, press down (engage) both clutch levers. Release attachment clutch lever. Attachment clutch should remain engaged until traction clutch lever is released, then both clutches *must* disengage. If they do not, contact your Dealer for repairs.

Check Tire Pressure (Models 921023, 024, 030, 032, 035, 036, 037)

Check tire pressure and adjust to the pressure listed on tire sidewall.

CAUTION: Avoid injury! Explosive separation of tire and rim parts is possible when they are serviced incorrectly:

- Do not attempt to mount a tire without the proper equipment and experience to perform the job.
- Do not inflate the tires above the recommended pressure.
- Do not weld or heat a wheel and tire assembly. Heat can cause an increase in air pressure resulting in an explosion. Welding can structurally weaken or deform the wheel.
- Do not stand in front or over the tire assembly when inflating. Use a clip-on chuck and extension hose long enough to allow you to stand to one side.

Check Track Tension (Model 921023)

Check tracking of unit and tension the tracks as required (see *Track Tension Adjustment* on page 37).

Check Auger Gearcase Oil

Check oil level in auger gearcase (see *Check Auger Gearcase* on page 27).

Check Engine Crankcase Oil

IMPORTANT: The engine may be shipped with oil in crankcase. Refer to Engine Manual for detailed instructions.

Fill Engine Fuel Tank

Fill fuel tank. DO NOT OVERFILL! See *FILLING FUEL TANK* on page 23

If Applicable - remove the protective wrap from the fuel tank and install the fuel cap located in the attached bag.

Check Function of all Controls

Ensure unit runs and performs properly. Refer to *OPERATION* on page 19.

Run-in Attachment Belt

1. Start unit in a well-ventilated area according to *Starting and Shut Off* on page 24.
2. Engage attachment clutch lever and run attachment for about 15 minutes.
3. Stop unit, wait for all moving parts to stop, and remove spark plug wire.
4. Adjust clutch idler according to *Attachment Clutch/Brake Adjustment* on page 32.
5. Adjust belt finger, if necessary. See *Check Belt Finger Clearance* on page 34.

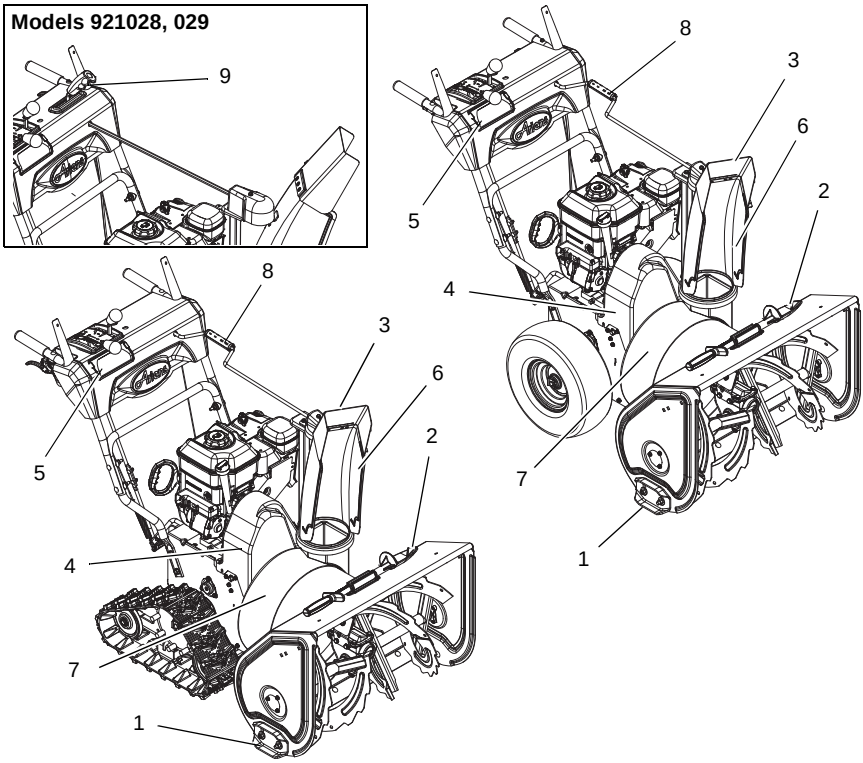

Figure 17

1. Skid Shoe
2. Clean-Out Tool
3. Remote Discharge Chute Deflector
4. Belt Cover
5. Headlight
6. Discharge Chute
7. Impeller
8. Chute Crank
9. Quick Turn Chute Control
   (Models 921028, 029)

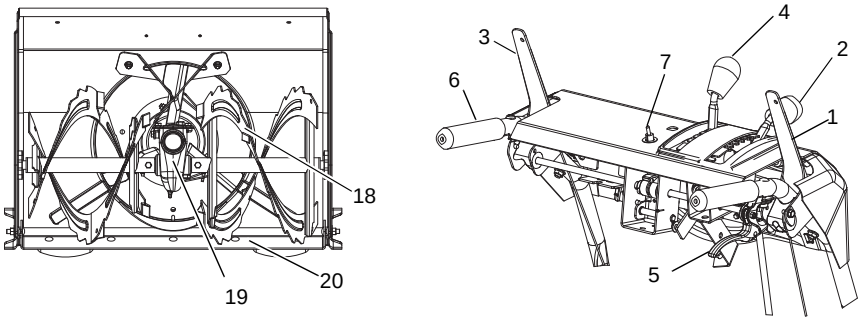

Briggs & Stratton

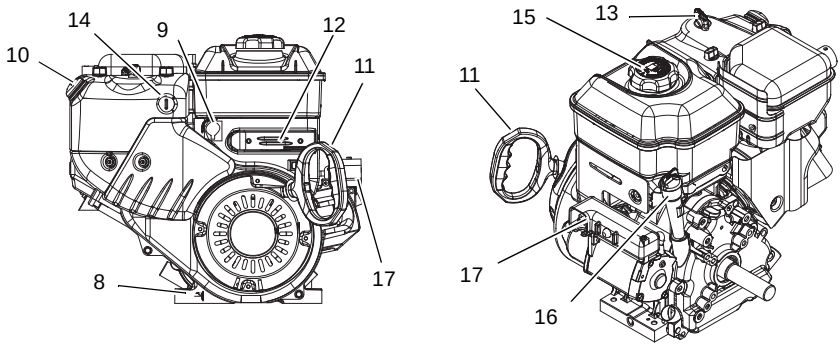

Ariens AX

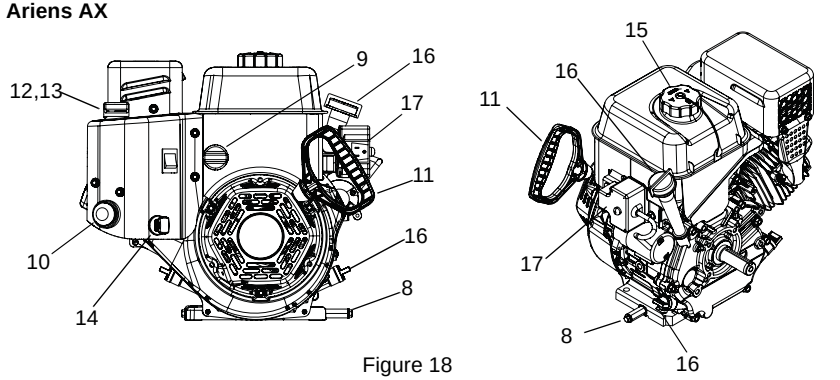

Figure 18

1. Attachment Clutch Lever
2. Speed Selector
3. Traction Drive Clutch Lever
4. Remote Deflector Control
5. Height Adjuster Trigger (Model 921023)
6. Handwarmers (Models 921028, 029)
7. Handwarmers Switch (Models 921028, 029)
8. Oil Drain
9. Fuel Shut-Off Valve
10. Primer Bulb
11. Recoil Starter Handle
12. Throttle
13. Choke Control Knob
14. Ignition Key
15. Fuel Tank and Cap
16. Oil Fill/Dipstick
17. Electric Start
18. Auger
19. Auger Gearcase
20. Scraper Blade

WARNING: AVOID INJURY. Read and understand the entire *Safety* section before proceeding.

WARNING: To avoid injury to hands and feet, always disengage clutches, shut off engine, and wait for all movement to stop before unclogging or working on snow thrower.

Keep hands and feet away from auger and impeller.

CONTROLS AND FEATURES

See Figures 17 and 18 for all Controls and Features locations.

Dual Handle Interlock

When Attachment Clutch and then Traction Drive Clutch are engaged, the Attachment Clutch will remain engaged (lever down) if released. To stop attachment, release Traction Drive Clutch and both clutches will disengage.

Traction Drive Clutch – Left Hand Lever

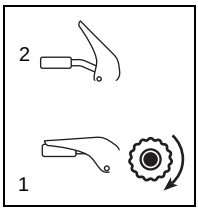

Squeeze the Traction Drive Clutch Lever against the Handlebar (1) to engage wheel drive for propelling unit. Forward speed will vary according to snow depth and moisture content.

Release lever (2) to stop movement.

NOTICE: When traveling to or from the area to be cleared, press down on the handlebars enough to raise the front of the unit slightly off the surface. Engage the traction drive clutch without engaging the attachment drive clutch.

Attachment Clutch – Right Hand Lever

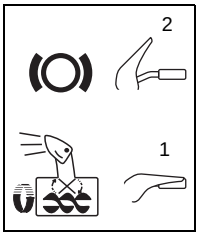

Squeeze Attachment Clutch Lever against handlebar (1) to engage attachment. Release both clutch levers (2) to disengage power and apply brake to attachment.

IMPORTANT: If the belt squeals continuously when the attachment clutch lever is engaged, the impeller may be frozen in the auger housing. Immediately release the attachment clutch lever and move the unit into a heated area to thaw.

NOTICE: If belt squeals continuously when impeller turns freely, see *Attachment Clutch/Brake Adjustment* on page 32.

Ignition Switch (Models 921023, 035, 036)

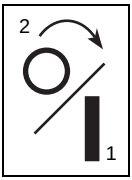

Operate the ignition switch with the removable key. To start the engine, turn the key to Start (1). To stop the engine, turn the key to Off (2).

Ignition Switch (Push/Pull Safety Key) (Models 921024, 028, 029, 030, 032, 037)

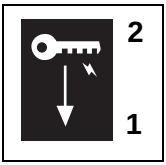

Key Switch has two positions:

1. “Stop” – pulled out
2. “Run” – pushed in

DO NOT twist key after it is inserted.

Engine Shutoff Switch (Models 921024, 028, 029, 030, 032, 037)

1. Set the engine shutoff switch to the run position (“Run”) to start and operate the engine.
2. Set the engine shutoff switch to the stop position (“Stop”) to shut off a running engine.

Primer Bulb

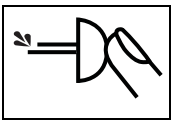

Pushing the primer bulb in adds fuel for easier engine start. Refer to *Starting and Shut Off* on page 24.

Speed Selector

Position the Speed Selector in the appropriate speed notch to control forward and reverse travel.

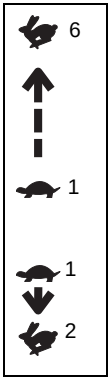

Forward:

(6) Fastest

(1) Slowest

Reverse:

(1) Slow

(2) Fast

IMPORTANT: DO NOT change motion from forward to reverse with clutch engaged. Forward speed can be changed without declutching.

Choke Control Knob

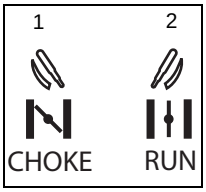

1.Choke Closed position: chokes off air to engine for easier start.

2.Choke Open position: allows for normal operation.

IMPORTANT: Gradually open choke after engine starts.

Throttle (Models 921023, 035, 036)

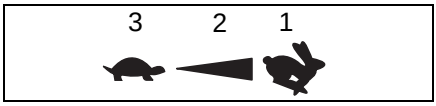

The throttle controls the engine speed. To increase or decrease the engine speed, adjust to:

1. Fast
2. Part Throttle
3. Slow

Throttle (Models 921024, 028, 029, 030, 032, 037)

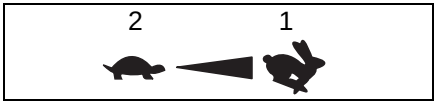

The throttle controls the engine speed. To increase or decrease the engine speed, adjust to:

1. Fast
2. Slow

Electric Starter

The electric starter will start a properly choked and cranked engine when the starter button is pushed. Refer to *Starting and Shut Off* on page 24.

Recoil Starter Handle

When pulled, recoil starter handle will turn engine over.

IMPORTANT: DO NOT let recoil starter handle snap back against starter.

Snow Clean-Out Tool

(Figure 19)

WARNING: Hand contact with the rotating impeller is the most common cause of injury associated with snow throwers. Never use your hand to clean out the discharge chute.

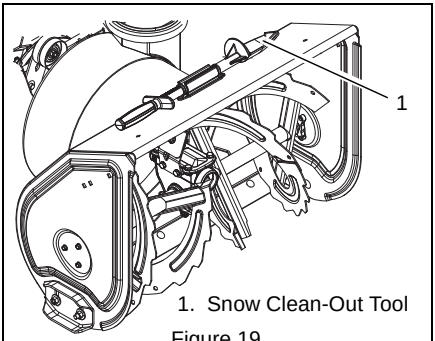

1. Snow Clean-Out Tool

Figure 19

To clear the discharge chute:

1. Shut off the engine.
2. Wait 10 seconds and make sure impeller blades have stopped rotating.
3. Remove the snow clean-out tool (1) from the auger housing and use it to remove the clog from the discharge chute.
4. Replace the snow clean-out tool on the auger housing.

Remote Deflector Control

Place deflector into position before operation. DO NOT throw snow any higher than necessary.

Place deflector remote in a forward notch to throw snow lower. Place deflector remote in a rearward notch to throw snow higher.

Discharge Chute

Discharge chute rotates 200°.

ALWAYS position discharge chute in safe direction and angle, away from operator and bystanders, before starting engine.

Discharge Chute Crank (Models 921023, 024, 030, 032, 035, 036, 037)

(Figure 20)

IMPORTANT: If chute does not stay in set position, adjust as directed in *SERVICE AND ADJUSTMENTS* on page 30, or repair before operation.

Rotate the chute with Discharge Chute Crank.

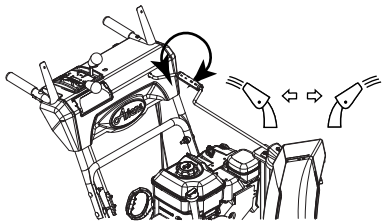

Figure 20

IMPORTANT: DO NOT force frozen chute controls. If frozen, take to warm place until controls are free.

Quick-Turn Chute Control (Models 921028, 029)

(Figure 21)

IMPORTANT: If chute does not stay in set position, adjust as directed in *Discharge Chute* on page 31, or repair before operation.

Rotate discharge chute with Quick-Turn Chute Control (Figure 21).

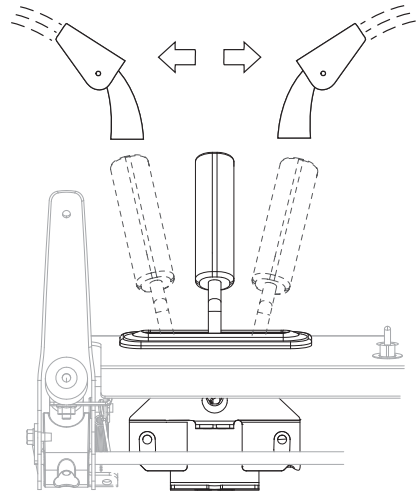

Figure 21

IMPORTANT: DO NOT force frozen chute controls. If frozen, take to warm place until controls are free.

Axle Lock Pin (Model 921024)

(Figure 22)

Use the axle lock pin to lock or unlock the right or left wheel. Lock both wheels to increase traction; unlock one wheel to allow for easier turning of the unit.

NOTICE: Unit will not drive with both wheels unlocked.

Figure 22

Heated Handles (Models 921028, 029)

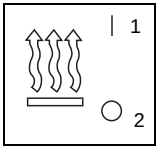

Turn the heated handles switch to the ON (1) position to activate. Turn the switch to the OFF (2) position to deactivate.

Scraper Blade

The scraper blade allows better contact with the surface being cleared. It also prevents damage to the housing from normal usage.

IMPORTANT: DO NOT allow Scraper Blade to wear too far or Auger/Impeller housing will become damaged.

Skid Shoes

The skid shoes control the distance between the scraper blade and the ground. Adjust skid shoes equally to keep blade level with the ground. Refer to *Pre-Start* on page 24 for recommended settings.

Track Angle (Model 921023)

(Figure 23)

The track angle can be adjusted to position the auger housing for level clearing, deep cutting or transport.

Squeeze the handlebar trigger and press down on the handlebars to move the auger housing into an up position. Release the trigger to hold the position.

Squeeze the handlebar trigger and lift up on the handlebars to move the auger housing into a down position. Release the trigger to hold the position.

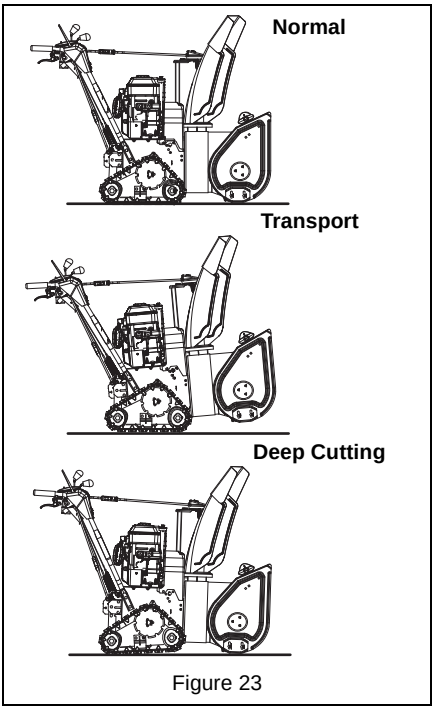

Figure 23

FILLING FUEL TANK

WARNING: AVOID INJURY. Read and understand the entire *Safety* section before proceeding.

GASOLINE

IMPORTANT: ALWAYS use gasoline that meets the following guidelines:

- Clean, fresh gasoline.
- A minimum of 87 octane/87 AKI (91 RON). High altitude use may require a different octane. Consult your engine manual.
- Gasoline with up to 10% ethanol (gasohol) or up to 10% MTBE (methyl tertiary butyl ether) is acceptable.
- Use of any gasoline other than those approved above will void the engine warranty. If the pumps are not marked for the content of alcohol or ethers, check ethanol and MTBE levels with the fuel supplier.
- Do not modify the fuel system to use different fuels.
- Never mix oil and gasoline.

NOTICE: All gasoline is not the same. If the engine experiences starting or performance problems after using a new gasoline, switch to a different fuel provider or fuel brand.

IMPORTANT: Excessively oxygenated or reformulated fuels (fuels blended with alcohols or ethers) can damage the fuel system or cause performance problems. If any undesirable operating problems occur, use a gasoline with a lower percentage of alcohol or ether.

Add Fuel Stabilizer to Extend Fuel Storage Life

IMPORTANT: Fuel stabilizer is recommended for extended storage (see *Fuel System* on page 38).

Add Fuel to Fuel Tank

1. ALWAYS place unit in open or well-ventilated area.
2. Stop engine and allow to cool.
3. Clean Fuel Cap and surrounding area to prevent dirt from entering Fuel Tank.
4. Remove fuel cap.

IMPORTANT: Refer to Engine Manual for correct type and grade of fuel.

5. Fill fuel tank to the bottom of filler neck. See *SPECIFICATIONS* on page 41 for fuel tank capacity.

IMPORTANT: DO NOT OVERFILL! This equipment and/or its engine may include evaporative emissions control system components, required to meet EPA and/or CARB regulations, that will only function properly when the fuel tank has been filled to the recommended level. Overfilling may cause permanent damage to evaporative emissions control system components. Filling to the recommended level ensures a vapor gap required to allow for fuel expansion. Pay close attention while filling the fuel tank to ensure that the recommended fuel level inside the tank is not exceeded. Use a portable gasoline container with an appropriately sized dispensing spout when filling the tank. Do not use a funnel or other device that obstructs the view of the tank filling process.

6. Replace fuel cap and tighten.
7. ALWAYS clean up spilled fuel.

Fuel Shut-Off Valve (Models 921023, 035, 036)

IMPORTANT: The fuel shut-off valve MUST be in the closed position prior to transporting the unit.

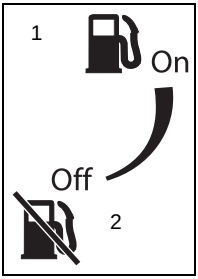

The fuel shut-off valve has two positions:

Open Position (1): Use this position to run the unit.

Closed Position (2): Use this position to service, transport, or store the unit.

Fuel Shut-Off Valve (Models 921024, 028, 029, 030, 032, 037)

IMPORTANT: The fuel shut-off valve MUST be in the closed position prior to transporting the unit.

The fuel shut-off valve has two positions:

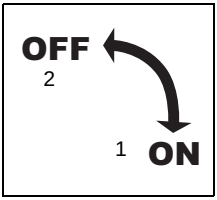

Open (1): Use this position to run the unit.

Closed (2): Use this position to service, transport, or store the unit.

PRE-START

1. Frozen Impeller

IMPORTANT: Before starting engine, check impeller to be sure it is not frozen.

To check impeller:

1. With ignition key switch in “Stop” position, squeeze Attachment Clutch Lever to Engaged position.
2. Pull Recoil Starter Handle.
3. If Impeller is frozen, (cannot pull Starter Handle) move unit to a heated area and thaw to prevent possible damage.

2. Check Function of Clutches

If clutches do not engage or disengage properly, adjust or repair before operation. See *Attachment Clutch/Brake Adjustment* on page 32 and *Traction Drive Clutch Adjustment* on page 34.

3. Check Dual Handle Interlock

Without the engine running, press down (engage) both clutch levers. Release attachment clutch lever. Attachment clutch should remain engaged until traction clutch lever is released, then both clutches *must* disengage.

If clutches do not engage or disengage properly, adjust or repair before operation. See *Attachment Clutch/Brake Adjustment* on page 32 and *Traction Drive Clutch Adjustment* on page 34.

4. Check Axle Lock Pins (Model 921024)

Use the axle lock pins to lock or unlock the wheels. Lock both wheels to increase traction; unlock one wheel to allow for easier turning of the unit.

5. Check Skid Shoes

Check and adjust Skid Shoes (See *Skid Shoes* on page 30). Allow 1/8" (3 mm) between scraper blade and hard, smooth surface(s). Allow 7/8" (22 mm) between scraper blade and uneven or gravel surfaces.

6. Check Engine Fuel & Crankcase Oil

WARNING: AVOID INJURY. Read and understand the entire *Safety* section before proceeding.

Check and add fuel if required. Check that the engine crankcase oil is full using dipstick. Refer to Engine Manual for detailed instructions.

TO STOP IN AN EMERGENCY

Immediately release both control levers to stop unit in an emergency. Stop engine, remove key and wait for all rotating parts to stop before leaving operator’s position.

STARTING AND SHUT OFF

WARNING: FAILURE TO FOLLOW INSTRUCTIONS could result in personal injury and/or damage to unit. DO NOT attempt to start your unit at this time. Read entire Owner/Operator Manual and the Engine Manual first.

IMPORTANT: Allow unit and engine to adjust to the outdoor temperature before clearing snow. Before shut-off, run the attachment a few minutes to prevent impeller freeze-up.

NOTICE: Try out each control without the engine running to see how it works and what it does.

Manual Start

1. Turn discharge chute straight ahead.
2. Make sure that the attachment clutch and traction drive clutch levers are fully disengaged.
3. Push Primer Bulb 2 or 3 times for cold engine.

NOTICE: When temperature is below -15° F (-26° C) additional priming may be needed.

4. If engine is cold, apply choke. See Engine Manual for detailed instructions.

NOTICE: A warm engine requires less choking than a cold engine.

5. Set throttle to proper starting position.
6. **Models 921023, 035, 036:** Put the ignition key in the ignition switch and turn it to the START position.
   Models 921024, 028, 029, 030, 032, 037: Insert key into ignition switch on engine and push into RUN position. DO NOT twist key after it is inserted.
7. **Models 921024, 028, 029, 030, 032, 037:** Turn on the engine shutoff switch (’RUN”).
8. Grasp recoil starter handle and pull rope out slowly until it pulls harder. Let rope rewind slowly.
9. Pull rope with a rapid continuous full arm stroke. Let rope rewind slowly.

IMPORTANT: DO NOT let recoil Starter Handle snap against Starter.

10. Repeat steps 8 and 9 until engine starts. (If engine does not start, refer to *TROUBLESHOOTING* on page 39.)
11. Adjust choke as needed.
12. Set throttle to Part Throttle or Slow position for adaptation to outside temperature or travel. Set throttle to Fast position for normal operation.

Electric Start (120V)

1. Connect extension cord to starter.

IMPORTANT: Prevent damage to unit. Know voltage of your starter and only use matching outlets.

2. Plug extension cord into 120V 3-wire, grounded outlet.

IMPORTANT: Use an extension cord that is capable of handling current requirements. Cord should be rated for a minimum of 13 amps, grounded, UL listed, CSA certified and labeled as suitable for outdoor use.

3. Turn discharge chute straight ahead.
4. Make sure that the attachment clutch and traction drive clutch levers are fully disengaged.
5. Push Primer Bulb 2 or 3 times for cold engine.

NOTICE: When temperature is below -15° F (-26° C) additional priming may be needed.

6. If engine is cold, apply choke. See Engine Manual for detailed instructions.

NOTICE: A warm engine requires less choking than a cold engine.

7. Set throttle to proper starting position.
8. **Models 921023, 035, 036:** Put the ignition key in the ignition switch and turn it to the START position.
   Models 921024, 028, 029, 030, 032, 037: Insert key into ignition switch on engine and push into RUN position. DO NOT twist key after it is inserted.
9. **Models 921024, 028, 029, 030, 032, 037:** Turn on the engine shutoff switch ("RUN").
10. Press starter button on engine until engine starts.

IMPORTANT: DO NOT operate starter more than 15 seconds per minute, as overheating and damage can occur. (If engine does not start, refer to *TROUBLESHOOTING* on page 39.)

11. Adjust choke as needed.
12. Disconnect power cord from outlet, then starter.
13. Set throttle to Part Throttle or Slow position for adaptation to outside temperature or travel. Set throttle to Fast position for normal operation.

Shut Off

1. Release Traction Drive Clutch Lever and allow unit to come to a complete stop.
2. Run Impeller a few minutes after use to prevent freeze-up of Impeller.
3. Release Attachment Clutch Lever and wait for all moving parts to come to a complete stop.
4. Move Throttle to the “Slow” position.
5. **Models 921023, 035, 036:** Turn ignition key into the "Stop" position and remove key.
   Models 921024, 028, 029, 030, 032, 037: Turn off the engine shut-off switch ("STOP").

SNOW REMOVAL

IMPORTANT: Allow unit and engine to adjust to the outdoor temperature before clearing snow.

NOTICE: Attachment clutch should be engaged before traction drive clutch when throwing snow.

1. Select Speed Control position and direction.
2. Engage Attachment Clutch – Right Hand Lever.
3. Engage Traction Drive Clutch – Left Hand Lever.

IMPORTANT: DO NOT overload unit capacity by attempting to clear snow at too fast a rate. Use slow speed to clear deep or hard packed snow.

Tips for Operation

Snow is best removed as soon as possible after snow fall.

To clear an area, run unit in an overlapping series of paths. For large areas, start in the middle and throw snow to each side, so snow is not cleared more than once.

ALWAYS direct snow away from area to be cleared and with direction of the wind.

TRAVELING

To travel from one work area to another:

1. Set Throttle to Slow or Part-Throttle position.
2. **Models 921024, 028, 029, 030, 032, 035, 036, 037:** Press down on handlebars enough to raise front of unit slightly off surface.
3. **Model 921023:** Place the unit in the transport position (see *Track Angle* on page 22).
4. Engage traction drive clutch lever without engaging attachment drive clutch.

TRANSPORT

ALWAYS shut off engine, remove key, and close fuel shut-off valve when transporting unit on a truck or trailer.

Use extra care when loading or unloading unit onto trailer or truck.

Secure unit chassis to transport vehicle. NEVER secure from rods or linkages that could be damaged.

DO NOT transport machine while engine is running.

MAINTENANCE

Ariens Dealers will provide any service or adjustments which may be required to keep your unit operating at peak efficiency. Should engine service be required, contact an Ariens dealer or an authorized engine manufacturer's service center.

WARNING: AVOID INJURY. Read and understand the entire *Safety* section before proceeding.

SERVICE POSITION

(Figure 24)

WARNING: Before tipping unit up onto housing, remove fuel so no spills will occur. Ensure unit is secure and will not tip over during maintenance.

1. Shut off engine, remove key, disconnect spark plug wire and allow unit to cool completely.
2. Close fuel shut-off valve (see *Fuel Shut-Off Valve* on page 23).
3. Drain fuel tank and fuel system (see Engine Manual for complete instructions).
4. Place unit on a flat level surface. Tip unit forward onto front of auger housing for service.

IMPORTANT: Ensure unit is secure and will not tip over. Strap and clamp onto bench if needed.

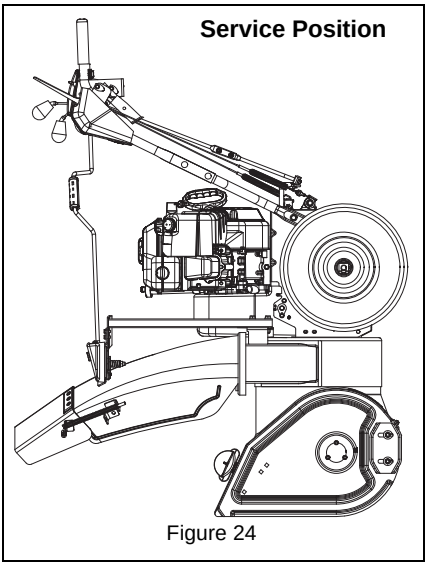

Figure 24

MAINTENANCE SCHEDULE

The chart below shows the recommended maintenance schedule that should be performed on a regular basis. More frequent service may be required.

MAINTENANCE SCHEDULE				
Service Performed	Each Use	Every 5 hrs.	Every 25 hrs.	Yearly
Check Dual Handle Interlock	•			
Check Fasteners	•			
Check Clutch Operation	•			
Check Clutch Cable Adjustment		*	•	
Clean Engine	•			
Check Engine Oil	•	•		
Change Engine Oil**				
Check Tire Pressure			•	
Check Auger Gearcase			•	•
General Lubrication			•	•
*After first five hours of operation.				
** Refer to Engine Manual for detailed instructions				

CHECK DUAL HANDLE INTERLOCK

Without the engine running, press down (engage) both clutch levers. Release attachment clutch lever. Attachment clutch should remain engaged until traction clutch lever is released, then both clutches *must* disengage.

CHECK FASTENERS

Make sure all hardware is tightened properly.

CHECK CLUTCH OPERATION

Auger / impeller must stop within 5 seconds when attachment clutch lever is released.

Wheels must stop quickly when traction drive clutch lever is released.

If clutches do not engage or disengage properly, adjust or repair before operation. See *Attachment Clutch/Brake Adjustment* on page 32 and *Traction Drive Clutch Adjustment* on page 34.

CHECK CLUTCH CABLE ADJUSTMENT

Make sure the attachment clutch and traction drive clutch are adjusted as specified in *Attachment Clutch/Brake Adjustment* on page 32 and *Traction Drive Clutch Adjustment* on page 34.

CLEAN ENGINE

Refer to Engine Manual for detailed instructions.

CHECK ENGINE OIL

The engine crankcase oil should be checked every 5 hours of operation. Oil level MUST be maintained in safe operating range on dipstick at all times or engine damage will result (see Engine Manual).

Park unit on a level surface. Refer to Engine Manual for detailed instructions.

CHANGE ENGINE OIL

Refer to Engine Manual for detailed instructions.

NOTICE: Run engine just prior to changing oil, warm oil will flow more freely and carry away more contaminants.

CHECK TIRE PRESSURE (Models 921024, 028, 029, 030, 032, 035, 036, 037)

Keep tires at pressure listed on the tire sidewall. See *Check Tire Pressure* on page 15.

CHECK AUGER GEARCASE

IMPORTANT: Proper oil level must be maintained.

Gear cases are filled to the correct level at the factory. Unless there is evidence of leakage, no additional lubricant should be required. Check oil level each season or every 25 hours of operation.

IMPORTANT: Be sure unit is resting on a level surface before checking lubricant levels.

To ensure adequate lubricant level:

1. Remove oil fill plug and seal washer (Figure 25). Lubricant must be 2.38 – 2.63" (6.05 – 6.68 cm) from the flat surface of the gear case cover.

IMPORTANT: DO NOT remove the gear case cover.

2. Check oil level with suitable dipstick device. Add lubricant if required.

NOTICE: Inspect seal washer for wear or rubber deterioration and replace as needed.

IMPORTANT: Use only Ariens L3 synthetic severe duty gear lube (Part Number 00068800). Use of other lubricants will void unit warranty.

3. Reinstall oil fill plug and seal washer to 80 lbf-in. (9 N•m).

IMPORTANT: DO NOT OVER-TORQUE! Note that measurements are in pound force inches (lbf-in) and NOT pound force foot (lbf-ft).

IMPORTANT: Be sure to install seal washer with rubber side down (Figure 25).

IMPORTANT: Improper torquing, omission of seal washer, or incorrect installation of seal washer will void unit warranty.

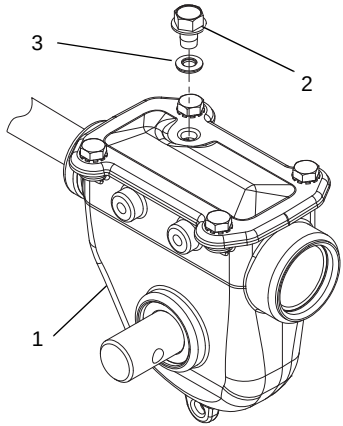

1. Auger Gearcase
2. Oil Fill Plug
3. Seal Washer

Figure 25

GENERAL LUBRICATION

IMPORTANT: Wipe each fitting clean before and after lubrication.

IMPORTANT: DO NOT allow grease or oil to get on friction disc, friction plate or belts.

NOTICE: Apply Ariens Hi-Temp Grease or equivalent to the lubrication fittings. See *SERVICE PARTS* on page 40.

Sno-Thro should be lubricated (Figure 26) at beginning of season or every 25 operating hours.

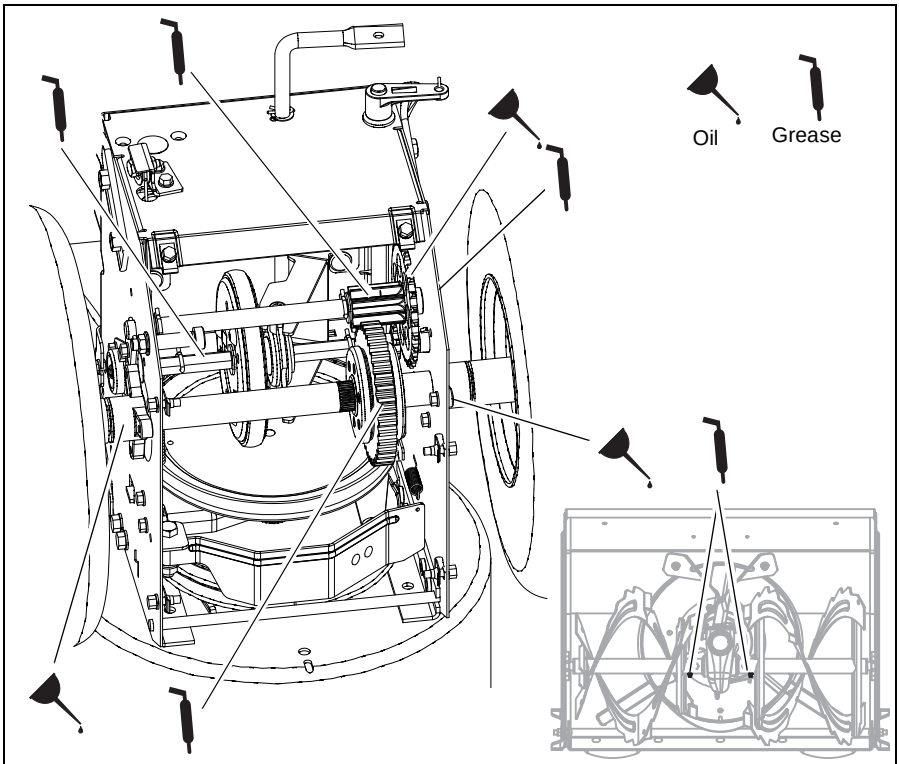

Figure 26

WARNING: AVOID INJURY. Read and understand the entire *Safety* section before proceeding.

SCRAPER BLADE

IMPORTANT: Damage to housing will result if blade wears down too far.

Scraper blade is adjustable to compensate for wear.

To adjust scraper blade:

1. Tip unit back onto handlebar, support housing and loosen nuts retaining blade.
2. Reposition scraper blade and tighten lock nuts.
3. Adjust skid shoes.

IMPORTANT: ALWAYS adjust skid shoes after adjusting scraper blade to prevent premature wear to scraper blade or damage to housing.

SKID SHOES

(Figure 27)

IMPORTANT: Skid shoes should be adjusted as conditions require. Allow 1/8" (3 mm) between scraper blade and hard smooth surfaces. Allow 7/8" (22 mm) between scraper blade and uneven or gravel surfaces.

1. Position unit on a hard, flat, smooth, level surface.
2. Adjust skid shoes by inserting a spacer of desired thickness under center of scraper blade, loosen skid shoe hardware.
3. Slide skid shoe to flat surface.

NOTICE: Be sure to keep housing level by adjusting skid shoes equally.

4. Tighten skid shoe hardware.

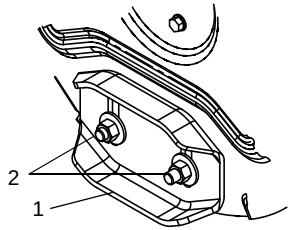

1. Skid Shoe
2. Skid Shoe Hardware

Figure 27

SHEAR BOLTS

(Figure 28)

IMPORTANT: Use only Ariens OEM shear bolts for replacement. Use of any other type of shear bolt may result in severe damage to unit. See *SERVICE PARTS* on page 40.

Occasionally a foreign object may enter the auger/impeller housing and jam the auger, breaking shear bolts which secure the auger to the shaft. This allows auger to turn freely on the shaft which may help prevent damage to gear case.

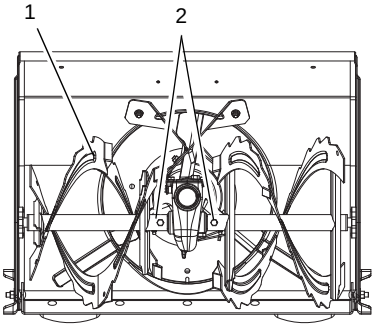

1. Auger
2. Shear Bolts

Figure 28

For Replacement:

1. Align shear bolt holes in auger with shear bolt holes in the shaft.
2. Drive shear bolt through hole (if shear bolt was broken this will drive remaining part from shaft).
3. Secure shear bolt with nut.

NOTICE: DO NOT overtighten the shear bolt. Tighten shear bolt to 5.8 – 12.2 lbf-ft (7.9 – 16.5 N•m).

REMOTE DEFLECTOR CONTROL ADJUSTMENT

(Figure 29)

Deflector must stay in selected position while throwing snow.

If deflector does not stay in set position:

1. Tighten nut beneath control panel to increase pressure on deflector control (Figure 29).

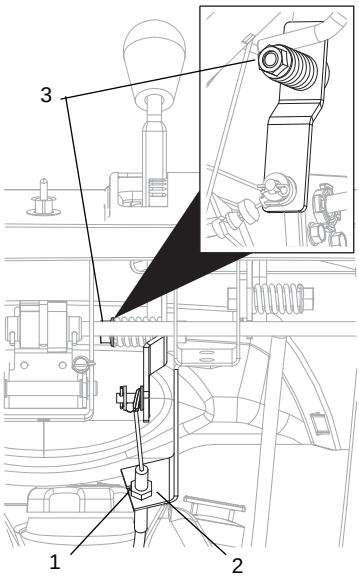

1. Cable Adjusting Nuts
2. Cable Support Bracket
3. Control Lever Nut

Figure 29

If deflector does not follow full range of travel:

1. Push deflector remote all the way forward.
2. Loosen adjusting nuts on cable support bracket underneath the control panel (Figure 29).
3. To adjust the deflector lower:

   Slide cable down. Tighten bottom nut.
4. To adjust deflector higher:

   Slide cable up. Tighten top nut.
5. Check travel and repeat adjustment as necessary.

DISCHARGE CHUTE (Models 921028, 029)

(Figure 30)

If chute does not stay in position while throwing snow or if chute does not rotate freely, adjust the cable under the gear cover so the chute lock fingers engage or disengage the locking gear.

If chute does not stay in position:

Loosen the cable by loosening the rear adjustment nut, and then tightening the forward adjustment nut against the bracket until the lock arm engages the gear teeth.

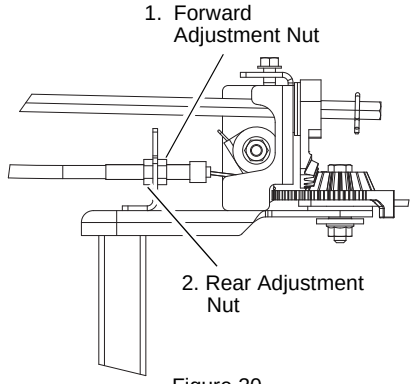

Figure 30

If chute does not rotate freely:

Tighten the cable by loosening the forward adjustment nut, and then tightening the rear adjustment nut against the bracket until all cable slack is removed and lock arm engages teeth (Figure 30).

DISCHARGE CHUTE CONTROL (Models 921023, 024, 030, 032, 035, 036, 037)

(Figure 31)

If discharge chute does not stay in position while operating, tighten nut on carriage bolt at pivot point to increase tension on spring.

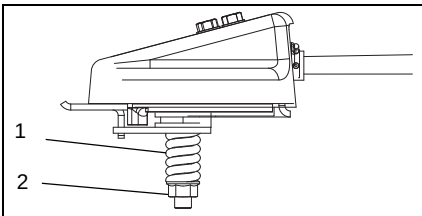

1. Spring
2. Nut

Figure 31

SPEED SELECTOR ADJUSTMENT

(Figure 32)

To adjust:

1. Disconnect adjustment pivot pin from speed selector lever by removing hairpin.
2. Place the speed selector on the control panel in the fastest forward speed position.

3. Turn the speed selector lever straight down towards the ground as far as it will go.
4. Thread the adjustment pivot pin along the shift rod until it aligns with the mating hole on the speed selector lever. Insert the pivot pin into hole.
5. Secure adjustment pivot pin with hairpin.
6. Make sure the speed selector shifts into each speed position.
7. Check forward and reverse speeds:
   a. Start unit.
   b. Shift speed selector into the first forward speed.
   c. Engage the traction drive clutch. Unit should move forward.
   d. Stop unit.
   e. Shift speed selector into first reverse speed.
   f. Engage the traction drive clutch. Unit should move backward.
   g. Shut off unit.
8. Adjust pivot pin on the shift rod as necessary so unit travels forward when speed selector is in first forward position and travels backward when speed selector is in first reverse position.
9. Connect the pivot pin to the speed selector arm with the hardware removed in step 1.

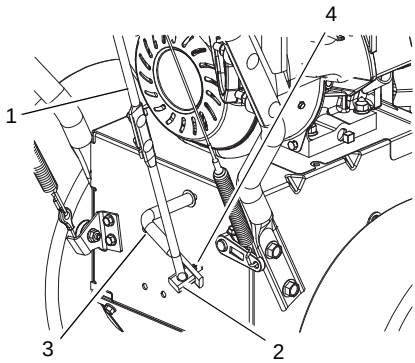

1. Shift Rod
2. Adjustment Pivot Pin
3. Speed Selector Lever
4. Hairpin

Figure 32

ATTACHMENT CLUTCH/BRAKE ADJUSTMENT

(Figures 33 and 34)

IMPORTANT: IMPROPER ADJUSTMENT could result in unexpected movement of auger and impeller causing death or serious injury. Auger/Impeller must stop within 5 seconds when Attachment Clutch lever is released.

Remove Attachment Cable Slack

1. Shut off engine, remove key, disconnect spark plug wire and allow unit to cool completely.
2. Loosen hardware securing belt cover to unit.

NOTICE: DO NOT completely remove the hardware from unit.

3. Remove belt cover.
4. Loosen jam nut on cable adjustment barrel, and then turn the adjustment barrel down to shorten cable and remove all cable slack (Figure 33).

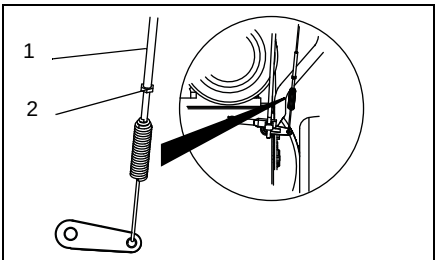

1. Adjustment Barrel
2. Jam Nut

Figure 33

5. With the attachment clutch disengaged, check that the attachment idler arm lightly touches the frame (Figure 34).
6. Tighten jam nut on the adjustment barrel.

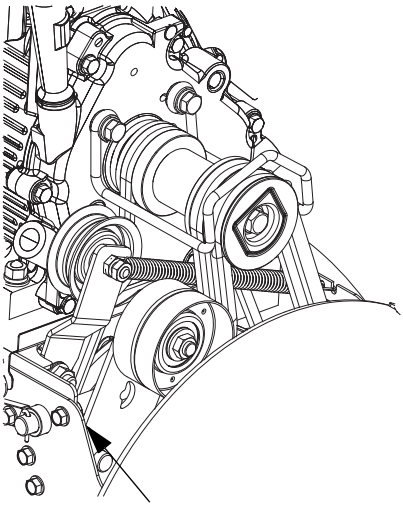

With the attachment clutch disengaged, check the attachment idler arm position here. The attachment idler arm should lightly touch the frame.

Figure 34

Check Attachment Idler Arm Roller Clearance

(Figure 35)

1. Place the unit into the service position. Remove the bottom cover.
2. With the attachment clutch lever engaged, check the clearance between the frame and plastic roller on the lower end of the attachment idler arm.

- If roller is 1/2 – 7/8" (12.7 – 22.2 mm) from frame, no further adjustment is needed.
- If roller is more than 7/8" (22.2 mm) from frame, loosen idler adjustment nut and move idler away from the belt, tighten adjustment nut and recheck roller clearance.
- If roller is less than 1/2" (12.7 mm) from frame, loosen idler adjustment nut and move idler closer to the belt, tighten adjustment nut and recheck roller clearance.

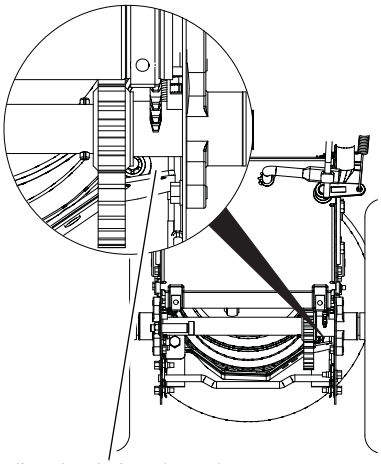

Roller should be 1/2 – 7/8" (12.7 – 22.2 mm) from the frame when the attachment clutch is engaged.

Figure 35

Check Attachment Brake

(Figure 36)

1. With the attachment clutch lever disengaged, brake pad must contact attachment belts. With clutch lever engaged, brake pad must be more than 1/16" (1.6 mm) from belts. If there is more than 1/16" (1.6 mm) gap, go to *Check Belt Finger Clearance* on page 34. If there is less than 1/16" (1.6 mm) gap, go to step 2.

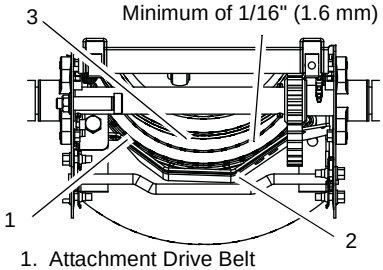

1. Attachment Drive Belt
2. Brake Arm and Pad
3. Attachment Pulley

Figure 36

2. If there is less than 1/16" (1.6 mm) gap between brake pad and belts, loosen idler adjustment nut and move idler away from belt. Position idler to achieve a 1/16" (1.6 mm) minimum brake pad gap and a 1/2 – 7/8" (12.7 – 22.2 mm) gap between the plastic roller and the frame.

IMPORTANT: If adjustments cannot be brought into specified ranges see your Dealer for repairs.

Check Belt Finger Clearance

1. With attachment clutch lever engaged, the belt finger located opposite the belt idler must be less than 1/8" (3 mm) from belts, but not touching the belts (Figure 37).

   To adjust belt finger, loosen the bolts and move the finger to the proper position. Tighten the bolts and recheck the belt finger clearance.
2. Replace the belt cover and tighten hardware.

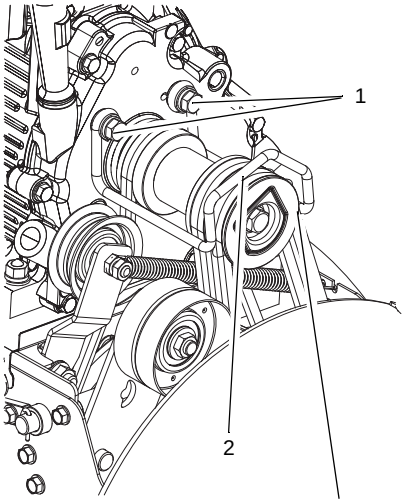

Check belt finger clearance here. With the attachment clutch engaged, there should be less than 1/8" (3 mm) clearance between the belts and the belt finger. The belt finger should not touch the belts.

1. Mounting Hardware
2. Belt Finger

Figure 37

TRACTION DRIVE CLUTCH ADJUSTMENT

If drive slips, adjust traction clutch to compensate for friction disc wear.

1. Loosen jam nut on traction cable adjustment barrel. Turn adjustment barrel down to shorten cable and remove all cable slack.
2. With traction clutch disengaged, check that drive plate finger touches the side of hole closest to auger housing (Figure 40).

ATTACHMENT DRIVE BELT REPLACEMENT

Remove old attachment drive belts:

1. Shut off engine, remove key, disconnect spark plug wire and allow unit to cool completely.
2. Loosen hardware securing belt cover to unit.

NOTICE: DO NOT completely remove the hardware from unit.

3. Remove belt cover.
4. **Models 921028, 029:** Remove chute gear cover.
5. Rotate discharge chute all the way to the left (as viewed from the operator's position).
6. **Models 921023, 024, 030, 032, 035, 036, 037:** Remove spring clip from chute crank and separate.

   Models 921028, 029: Remove hairpin from discharge chute rod and separate.
7. Disconnect chute lock cable and chute deflector cap cable (if equipped).
8. Remove belt finger (Figure 37).
9. Remove attachment drive belt from engine sheave (it may be necessary to turn engine sheave using recoil starter handle).

IMPORTANT: To avoid bending bottom cover when tipping unit apart, support handlebars firmly or tip unit up on housing and remove bottom cover by removing six cap screws before separating unit.

10. Support Sno-Thro frame and housing.

CAUTION: Always support Sno-Thro frame and blower housing when loosening the cap screws holding them together. Never loosen cap screws while unit is in service position.

11. Remove hex bolts securing housing to frame (two on each side). Tip housing and frame apart on pivot pin (Figure 38).
12. Remove attachment drive belts from attachment pulley (hold brake away from belt).

Models 921023, 024, 030, 032, 035, 036, 037

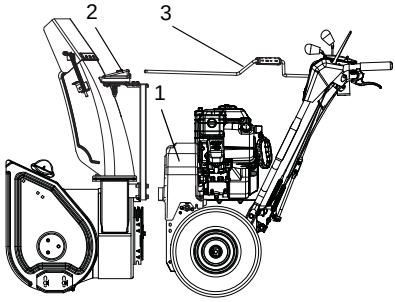

Models 921028, 029

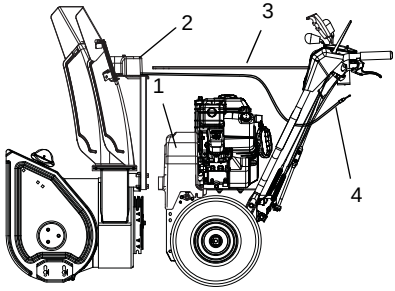

1. Belt Cover
2. Chute Gear Cover
3. Discharge Chute Rod
4. Chute Lock Cable

Figure 38

Install New Attachment Drive Belts

1. Place new attachment belts onto attachment pulley.

NOTICE: Holding down the attachment clutch lever will make it easier to reconnect the housing and frame.

2. Tip housing and frame back together and secure with hex bolts.
3. Place belts onto engine sheave.
4. Reposition and secure belt finger.

IMPORTANT: With attachment clutch lever engaged, belt finger on the side opposite the belt idler should be less than 1/8" (3 mm) from belt, but not touching the belt. Adjust belt finger as necessary.

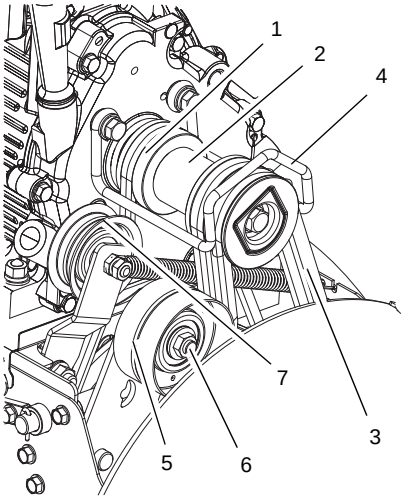

1. Traction Drive Belt
2. Engine Sheave
3. Attachment Drive Belts
4. Belt Finger
5. Attachment Belt Idler
6. Attachment Idler Adjustment Nut
7. Traction Belt Idler

Figure 39

5. Check adjustment. *See Attachment Clutch/Brake Adjustment* on page 32.

WARNING: AUGER / IMPELLER MUST STOP within 5 seconds when attachment clutch lever is released or unit damage or serious injury may result.

6. Reconnect chute lock cable, chute deflector cap cable, chute crank and secure.
7. **Models 921028, 029:** Reinstall chute gear cover.
8. Replace belt cover and tighten hardware.

TRACTION DRIVE BELT REPLACEMENT

NOTICE: Replacement will be easier with housing and frame tipped apart and bottom cover off.

1. Remove attachment drive belts (see *Remove old attachment drive belts:* on page 34).
2. Detach traction idler spring.

3. Remove swing gate spacer and slide drive plate over so that finger clears stop hole in frame and can swing past it (Figure 40).

NOTICE: The drive plate is detached to create space between the drive plate and friction disc to remove and reinstall the belt.

4. Pull idler away from traction drive belt and remove belt from idler pulley, engine sheave and driven pulley (it may be necessary to turn engine pulley using recoil starter handle).

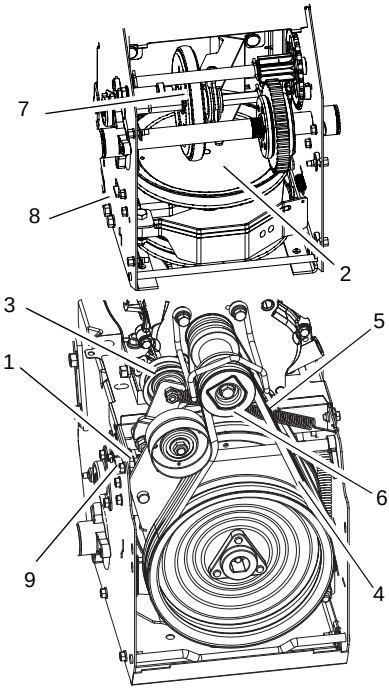

1. Swing Gate Spacer
2. Drive Plate Assembly
3. Traction Belt Idler
4. Attachment Drive Belts
5. Traction Drive Belt
6. Engine Sheave
7. Friction Disc
8. Drive Plate Finger
9. Swing Gate Pivot Bushing

Figure 40

5. Install new traction drive belt onto driven pulley and engine sheave.
6. Swing drive plate toward friction disc until finger lines up with stop hole in frame. Slide drive plate over, inserting finger into stop hole. Reinstall swing gate spacer.
7. Reinstall traction idler spring.

NOTICE: Make sure the drive plate assembly return spring remains connected to the drive plate and the frame. Make sure the swing gate pivot bushing is piloted in the pivot hole in the frame.

8. Replace attachment drive belt (See *Install New Attachment Drive Belts* on page 35).

FRICTION DISC REPLACEMENT

1. Shut off engine, remove key, disconnect spark plug wire and allow unit to cool completely.
2. Place unit into service position on a level surface.
3. Remove both wheels.
4. Remove bottom cover by removing six hex bolts.
5. Disconnect pivot pin from the speed selector arm. Save the hardware for reinstallation.
6. Remove spring clip nearest drive sprocket from hex shaft.
7. Remove left bearing flange from frame.
8. Slide hex shaft to the left to remove pinion sprocket and friction disc assembly from hex shaft.

NOTICE: Be sure to save washers between bearing and speed selector arm for reassembly.

9. Remove friction disc assembly from frame.
10. Remove three screws holding friction disc to carrier bearing.
11. Remove old friction disc. Put the new friction disc in place, cup side to carrier bearing.
12. Reinstall three screws onto new friction disc and carrier bearing. Torque to 5 – 6 lbf-ft (6.78 – 8.14 N•m).
13. Insert new friction disc assembly into frame. Install washers onto carrier bearing and slide into speed selector arm.
14. Slide hex shaft through new friction disc assembly. Install pinion sprocket onto hex shaft and slide shaft into right bearing.

15. Install left bearing using hardware removed in step 7.
16. Reinstall clip pin into hex shaft.
17. Connect pivot pin to speed selector arm (see *Speed Selector Adjustment* on page 31)
18. Replace bottom cover.
19. Install wheels.
20. Return unit to upright position.
21. Connect spark plug wire to spark plug.
22. Adjust traction drive clutch (see *Traction Drive Clutch Adjustment* on page 34).

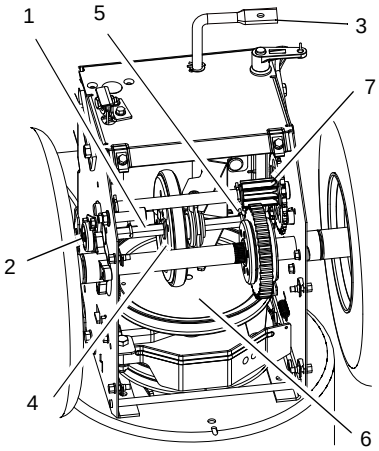

1. Hex Shaft
2. Bearing Flange
3. Speed Selector Arm
4. Friction Disc
5. Spring Clip
6. Drive Plate Assembly
7. Drive Sprocket

Figure 41

TRACK TENSION ADJUSTMENT (Model 921023)

(Figures 42 and 43)

Check the track tension by applying pressure on the track midway between the upper and rear track rollers. Deflection should be approximately 3/8" (9.6 mm) (Figure 42).

If deflection is excessive, tighten the track tension.

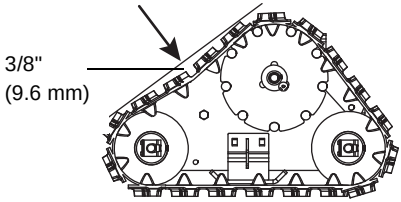

Figure 42

If unit pulls to the left or right when a straight path is desired adjust the track tension. If the unit is pulling to the left, tighten the left track adjuster. If the unit is pulling to the right, tighten the right track adjuster.

To adjust (Figure 43):

1. Tighten the adjuster nut to tighten the track tension.

   Loosen the adjuster nut to reduce track tension.
2. Check that unit tracks straight with no pulling to either side.

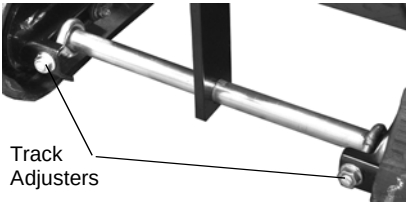

Figure 43

HEIGHT ADJUSTER CABLE ADJUSTMENT (Model 921023)

(Figure 44)

1. Make sure that height adjustment lock finger is fully engaged (Figure 44).
2. Loosen jam nuts on cable mount bracket.
3. Adjust the jam nuts to remove all cable slack and bring the overtravel arm into slight contact with the right end of the slot in the height adjuster lock finger.
4. Tighten the jam nuts.

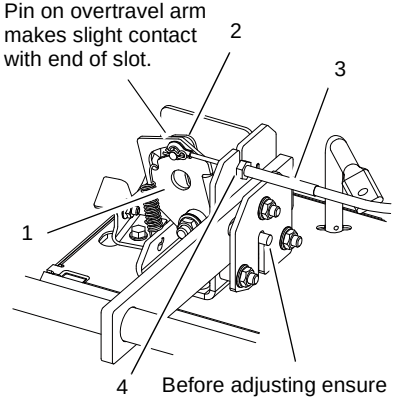

1. Height Adjuster Lock Finger
2. Overtravel Arm
3. Height Adjuster Cable
4. Jam Nuts

Figure 44

STORAGE

WARNING: AVOID INJURY. Read and understand the entire *Safety* section before proceeding.

SHORT TERM

IMPORTANT: NEVER spray unit with high pressure water or store unit outdoors.

Run with attachment clutch engaged a few minutes after each use to free unit of any loose or melting snow.

Close fuel shut-off valve.

Inspect unit for visible signs of wear, breakage or damage.

Keep all nuts, bolts and screws properly tightened and know unit is in safe working condition.

Store unit in a cool, dry protected area.

LONG TERM

Clean unit thoroughly with mild soap and low pressure water and lubricate (see *MAINTENANCE* on page 26) Touch up all scratched painted surfaces.

Remove weight from wheels by putting blocks under frame or axle.

FUEL SYSTEM

Gasoline left in the fuel system for extended periods without a stabilizer will deteriorate, resulting in gum deposits in the system. These deposits can damage the carburetor and the fuel hoses, filter and tank. Prevent deposits from forming in the fuel system during storage by adding a quality fuel stabilizer to the fuel. Follow the recommended mix ratio found on the fuel stabilizer container.

IMPORTANT: NEVER store the engine with fuel in the fuel tank inside of a building with potential sources of ignition.

Add Fuel Stabilizer

1. Turn the fuel valve off while engine is running and allow the engine to run until it stops. Turn engine OFF when it begins surging to avoid engine damage.
2. Add fuel stabilizer, following the manufacturer’s instructions.
3. Turn fuel valve on after adding fuel stabilizer.
4. Restart engine.
5. Run the engine outdoors for 5 minutes to be sure that treated gasoline has replaced the untreated gasoline in the carburetor.
6. Slow the engine to an idle speed.
7. Repeat step 1 above.

TROUBLESHOOTING

PROBLEM	PROBABLE CAUSE	CORRECTION
Engine will not crank/start.	1. Fuel tank is empty. 2. Fuel shut-off valve closed. 3. Build up of dirt and residue around governor/carburetor. 4. Key Switch not in run position. 5. Electric starter not functioning.	1. Fill fuel tank (see *FILLING FUEL TANK* on page 23). 2. Open fuel shut-off valve. 3. Clean area around governor/carburetor. 4. Put Key Switch into run position. 5. Check for a bad starter or connections.
Engine stops.	1. Out of fuel. 2. Fuel shut-off valve closed. 3. Mechanical jam in blower rake or impeller. 4. Polluted fuel supply. 5. Faulty spark plug. 6. Plugged fuel cap vent.	1. Fill fuel tank (see *FILLING FUEL TANK* on page 23). 2. Open fuel shut-off valve. 3. Turn off engine, remove key, and wait for all moving parts to stop. Check for and remove obstruction and repair before restart. 4. Replace with clean fuel. 5. Replace or clean spark plug. 6. Replace fuel cap.
Engine problems.	1. See Engine Manual.	1. See Engine Manual.
Does not operate in forward / reverse.	1. Friction disc worn out. 2. Traction belt not functioning. 3. Speed selector not adjusted properly.	1. Repair or replace friction disc. *See Friction Disc Replacement* on page 36. 2. Repair or replace traction drive belt. *See Traction Drive Belt Replacement* on page 35. 3. Adjust speed selector. *See Speed Selector Adjustment* on page 31.
Small rubber beads collect in frame.	1. Friction disc wear.	1. Normal friction disc wear. Chunks or large pieces of rubber mean friction disc should be checked and replaced as necessary.
Unit throws snow poorly or does not throw snow.	1. Shear bolts broken. 2. Attachment clutch/brake not adjusted properly. 3. Impeller is frozen in place. 4. Ice or debris is obstructing auger. 5. Attachment drive belts slipping, worn or damaged.	1. Replace shear bolts *(see Shear Bolts* on page 30) 2. Adjust attachment clutch/brake *(see Attachment Clutch/Brake Adjustment* on page 32) 3. Move unit to a warm place to thaw. 4. With the engine off and auger disengaged, check for obstructions and remove. 5. To adjust belts see *(see Attachment Clutch/Brake Adjustment* on page 32) To replace belts see *Attachment Drive Belt Replacement* on page 34.
Unit runs briefly then stops.	1. A build up of fumes in the fuel tank is creating too much pressure in the fuel tank.	1. Carefully loosen the cap to the fuel tank.

SERVICE PARTS

Order the following parts through your Dealer:

Part No.	Description
00036800	Ariens Hi-Temp Grease (3.3 oz cartridges)
00592900	Fuel Stabilizer (4 oz.)
21534100	Spark Plug (Models 921023, 035, 036)
21547400	Spark Plug (Models 921024, 028, 029, 030, 032, 037)
07200514	Auger Belt (Set of 2) (Models 921023, 024, 030, 035, 036)
07200536	Auger Belt (Set of 2) (Models 921028,921013, 022, 023, 027 029, 032, 037)
07200111	Traction Belt (Models 921024, 030, 035, 036)
07200114	Traction Belt (Model 921023)
07200717	Traction Belt (Models 921028, 029, 032, 037)
00170800	Friction Disc
52100100	Shear Bolt Kit
06400920	Gear Case Seal Washer
72101100	Kit, Steel Skid Shoes

ACCESSORIES

See your authorized Ariens dealer to add the additional accessories available to your Sno-Thro.

Part No.	Description
72406500	Front Weight Kit
72406900	Slicer Bar
72600300	Composite Skid Shoes
72601500	Cover
72408000	Snow Cab
72101400	Heated Hand Grips (Models 921023, 024, 030, 032, 035, 036, 037)

SPECIFICATIONS			
Model Number	921024	921032	921028
Description	Deluxe 24	Deluxe 30	Deluxe 24 Platinum
Engine			
Engine	Ariens AX		
Gross Torque* – lbf-ft (N•m)	12.5 (16.95)	14.5 (19.66)	
*Engine output stated in gross torque per SAE J1940 as rated by engine manufacturer			
Displacement – in. (cc)	15.50 (254)	17.76 (291)	
High Idle – RPM (min)	3600 ± 50		
Electric Start	120 V		
Fuel Tank Capacity – qt (Liters)	2.9 (2.7)	3.8 (3.6)	
Chute			
Chute Rotation Angle	200°		
Rotation Control	2.5 X Quick Turn		Quick Turn
Deflector Control	Remote		
Auger			
Snow Clearing Width – in. (cm)	24 (61)	30 (76.2)	24 (61)
Gearcase	Cast Iron		
Auger Diameter – in. (cm)	14 (35.6)		
Impeller			
Impeller Diameter – in. (cm)	14 (35.6)		
Impeller Speed (RPM)	1010		
Impeller Tip Speed – ft/sec (m/sec)	61.7 (18.8)		
Drive			
Blower Drive	Dual HA Belts		
Drive	Disc-O-Matic™		
Speeds	6 Forward and 2 Reverse		
Axle Control	Pin-Lock	Auto Turn™	
Pneumatic Tires – in. (cm)	15 x 5-6 (38 x 13-15) Directional	16 x 4.8 (41 x 12) Directional	
Size and Weight			
Length – in. (cm)	55.4 (140.7)	57.91 (147.1)	
Height – in. (cm)	44.5 (113.3)	44.25 (112.4)	
Width – in. (cm)	26.4 (67.1)	32.4 (82.3)	26.4 (67.1)
Weight – lbs (Kg)	229 (103.9)	259 (117.5)	254 (115.2)

SPECIFICATIONS			
Model Number	921029	921030	921036
Description	Deluxe 30 Platinum	Deluxe 28	Deluxe 28
Engine			
Engine Model	Ariens AX		Briggs & Stratton Polar Force 1650
Gross Torque* – lbf-ft (N•m)	20.0 (27.12)	12.5 (16.95)	16.5 (22.37)
*Engine output stated in gross torque per SAE J1940 as rated by engine manufacturer			
Displacement – in. (cc)	25.26 (414)	15.50 (254)	20.9 (342)
High Idle – RPM (min)	3600 ± 50		3600 ± 100
Electric Start	120V		
Fuel Tank Capacity – qt (Liters)	3.8 (3.6)	2.9 (2.7)	3.2 (3)
Chute			
Chute Rotation Angle	200°		
Rotation Control	Quick Turn	2.5 X Quick Turn	
Deflector Control	Remote		
Auger			
Snow Clearing Width – in. (cm)	30 (76.2)	28 (71.1)	
Gearcase	Cast Iron		
Auger Diameter – in. (cm)	14 (35.6)		
Impeller			
Impeller Diameter – in. (cm)	14 (35.6)		
Impeller Speed (RPM)	1010		
Impeller Tip Speed – ft/sec (m/sec)	61.7 (18.8)		
Drive			
Blower Drive	Dual HA Belts		
Drive	Disc-O-Matic™		
Speeds	6 Forward and 2 Reverse		
Axle Control	Auto Turn™		
Pneumatic Tires – in. (cm)	16 x 4.8 (41 x 12) Directional	15 x 5-6 (38 x 13 -15) Directional	
Size and Weight			
Length – in. (cm)	57.91 (147.1)	55.4 (140.7)	
Height – in. (cm)	44.25 (112.4)	44.5 (113.3)	
Width – in. (cm)	32.4 (82.3)	29.9 (75.9)	
Weight – lbs (Kg)	274 (124.3)	235 (106.6)	242 (109)

SPECIFICATIONS

Model Number	921023	921035	921037
Description	Deluxe 28 Track	Deluxe 28	Deluxe 28
Engine			
Engine Model	Briggs & Stratton Polar Force 1150		Ariens AX
Gross Torque* – lbf-ft (N•m)	11.5 (15.59)		20.0 (27.1)
*Engine output stated in gross torque per SAE J1940 as rated by engine manufacturer			
Displacement – in. (cc)	15.19 (249)		25.2 (414)
High Idle – RPM (min)	3600 ± 100		3600 ± 50
Electric Start	120V		
Fuel Tank Capacity – qt (Liters)	3.2 (3)		3.8 (3.6)
Chute			
Chute Rotation Angle	200°		
Rotation Control	2.5 X Quick Turn		
Deflector Control	Remote		
Auger			
Snow Clearing Width – in. (cm)	28 (71.1)		
Gearcase	Cast Iron		
Auger Diameter – in. (cm)	14 (35.6)		
Impeller			
Impeller Diameter – in. (cm)	14 (35.6)		
Impeller Speed (RPM)	1010		
Impeller Tip Speed – ft/sec (m/sec)	61.7 (18.8)		
Drive			
Blower Drive	Dual HA Belts		
Drive	Disc-O-Matic™		
Speeds	6 Forward and 2 Reverse		
Axle Control	Solid Axle	Auto Turn™	
Pneumatic Tires – in. (cm)	5.5 (13.97) Directional Track Drive	16 x 4.8 (41 x 12) Directional	
Size and Weight			
Length – in. (cm)	57.9 (147.1)	55.4 (140.7)	
Height – in. (cm)	44.2 (112.4)	44.5 (113.3)	
Width – in. (cm)	29.9 (75.9)		
Weight – lbs (Kg)	259 (117.5)	235 (106.6)	247 (112.1)

Sno-Thro®, Sno-Tek® and Chore Performing Equipment Limited Warranty

Ariens Company (Ariens) warrants to the **original purchaser** that Ariens, Gravely, Parker, and Countax brand chore performing equipment (including Sno-Thro® and Sno-Tek® equipment) purchased on or after 1/1/2013 will be free from defects in material and workmanship for the time period noted in the chart below. Equipment put to personal use around a single household or residence is considered "Consumer Use"; equipment put to any business use (agricultural, commercial, or industrial) or used at multiple locations is considered "Commercial Use." If any product is rented or leased, then the duration of these warranties shall be 90 days after the date of purchase.

An authorized Ariens dealer (Ariens brand products), Gravely dealer (Gravely brand products), Parker dealer (Parker brand products), or Countax dealer (Countax brand products) will repair any defect in material or workmanship, and repair or replace any defective part, subject to the conditions, limitations and exclusions set forth herein. Such repair or replacement will be free of charge (labor and parts) to the original purchaser except as noted below.

Warranty Code	Product Group	Warranty Period Consumer Use	Warranty Period Commercial Use
PA	Log Splitters, Brushes, String Trimmers, Edgers	3 Years	90 Days
PB	Professional Powered Brushes	3 Years	1 Year
PC	Tillers	2 Years	90 Days
PD	Vacuums, Blowers, Sweepers, Truck Loaders, Lawn Rakes, Sprayers, Aerators, etc.	1 Year	1 Year
PE	Pressure Washer, Generators	3 Years	1 Year
SA	Professional Sno-Thro®	3 Years	1 Year
SB	Compact, Deluxe, Platinum, AMP™ Sno-Thro®, Path-Pro®	3 Years	90 Days
SC	Sno-Tek®	2 Years	90 Days
UA	Utility Vehicles	1 Year	1 Year
N/A	Service (Replacement) Parts	90 Days (no labor)	90 Days (no labor)

Special Extensions

The chart below details special extensions to this warranty:

Warranty Code	Warranty Exception	Warranty Period	Use	Detail
SA	Cast Iron Auger Gear Case	5 Years	All	5 Years for all users including Commercial
SB	Cast Iron Auger Gear Case	5 Years	Consumer	5 Years for Consumer use; 1 Year for Commercial Use
SB	Batteries for AMP™ Sno-Thro®	2 Years	Consumer	100% first year; prorated second year.

Exceptions and Limitations

The chart below details special exceptions to this warranty:

Warranty Code	Warranty Exception	Warranty Period	Use	Detail
All	Batteries	1 Year	All	Prorated
All	Belts, Muffler, Tires	None	Commercial	These components are not covered when used commercially.
All	Cloth, Plastic, and Rubber Components (Including Belts and Cables)	Maximum 2 Years	All	Warranty is limited to 2 years for consumer use. (1 year for warranty code "PD".) Except as noted above, these components are covered for defect, not for wear.
SA, SB, SC	Idlers	Maximum 2 Years	All	Warranty is limited on idlers to 2 years for consumer use.
All	Engines	See Engine Manufacturer's Warranty	All	Engines are covered by engine manufacturer's warranty. Refer to engine manufacturer's warranty statement.

Customer Responsibilities

Register the product immediately at the time of sale. If the dealer does not register the product, the customer must complete the product registration card in the literature package and return it to Ariens Company, or register the unit online at www.ariens.com, www.gravely.com, www.countax.com or www.parkersweeper.com.

To obtain warranty service, the **original purchaser** must:

- Perform the maintenance and adjustments explained in the Owner's Manual.
- Promptly notify Ariens or an authorized Ariens, Gravely, Parker or Countax service representative of the need for warranty service.
- Transport the product to and from the place of warranty service at owner's expense.
- Have the warranty service performed by an authorized Ariens, Gravely, Parker or Countax service representative.

To Find an Authorized Service Representative:

In the U.S. and Canada:		
Use the dealer locator on our websites: www.ariens.com • www.gravely.com		
Or contact us by mail or by phone:		
In the U.S., Canada, Mexico, Caribbean, Central and South America:	**In Europe, Asia, Africa or the Middle East:**	**In Australia or New Zealand:**
Ariens Company 655 W. Ryan Street Brillion, WI 54110 Phone: (920) 756 - 4688 www.ariens.com	Countax Ltd, Countax House Great Haseley, Oxfordshire, OX44 7PF Phone: 0800 597 7777 www.countax.com	Ariens Company Building 2 6 Wedgewood Rd. Hallam, Victoria 3803 Australia Phone: (03) 9796 4244 1800 335 489 www.ariens.com.au

Exclusions – Items Not Covered by This Warranty

- Parts that are not genuine Ariens, Gravely, Parker or Countax service parts are not covered by this warranty and may void the warranty.
- Damages resulting from the installation or use of any part, accessory, or attachment which is not approved by the Ariens Company for use with product(s) identified herein are not covered by this warranty.
- The following maintenance, service and replacement items are not covered by this warranty unless they are noted in the Limitations section above: lubricants, spark plugs, oil, oil filters, air filters, fuel filters, brake linings, brake arms, brake shoes, skid shoes, scraper blades, shear bolts, mower blades, mower vanes, brushes, headlights, light bulbs, knives, cutters, and single-stage impellers.
- Any misuse, alteration, improper assembly, improper adjustment, neglect, or accident which requires repair is not covered by this warranty.
- **Use of gasoline blends exceeding 10% ethanol voids any and all warranties.**
- Products are designed to the specifications in the area that the product was originally distributed. Different areas may have significantly different legal and design requirements. This warranty is limited to the requirements in the area in which the unit was originally distributed. Ariens Company does not warrant this product to the requirements of any other area. Warranty service is limited to service within the area originally distributed.
- In countries other than the United States and Canada, contact the Ariens Company dealer for warranty policies that govern within your country. Rights may vary from country to country and within any one country.
- Normal Wear: This warranty does not cover repair when normal use has exhausted the useful life of a part such as a high pressure hose, spray wand, nozzles, trigger handle, supply hoses, quick couplers, gaskets, valves, pistons, pump valve assemblies, o-rings, water and oil seals.

Special Exclusions on Utility Vehicles

The following uses void the warranty terms on Utility Vehicles (Warranty Code UA):

- Renting or leasing the utility vehicle.
- Using the utility vehicle to tow or carry loads in excess of the limits specified in the Owner/Operator Manual.
- Modifying the utility vehicle with parts and accessories that are not genuine or authorized Ariens or Gravely parts or accessories.
- Modifying the utility vehicle without express written authorization from Ariens Company.
- Operating the utility vehicle when it has not been completely and properly assembled and pre-delivered by an authorized Gravely dealer.

Disclaimer

Ariens Company may from time to time change the design of its products. Nothing contained in this warranty shall be construed as obligating Ariens Company to incorporate such design changes into previously manufactured products, nor shall such changes be construed as an admission that previous designs were defective.

LIMITATION OF REMEDY AND DAMAGES

Ariens Company's liability under this warranty, and under any implied warranty that may exist, is limited to repair of any defect in workmanship, and repair or replacement of any defective part. Ariens Company shall not be liable for incidental, special, or consequential damages (including lost profits). Some states do not allow the exclusion of incidental or consequential damages, so the above limitation or exclusion may not apply to you.

AUSTRALIAN CONSUMER LAW

The following applies solely to warranties subject to Subsection 102(1) of the Australian Consumer Law: Our goods come with guarantees that cannot be excluded by the Australian Consumer Law. You are entitled to a replacement or refund for a major failure and for compensation for any other reasonably foreseeable loss or damage. You are also entitled to have the goods repaired or replaced if the goods fail to be of acceptable quality and failure does not amount to a major failure.

DISCLAIMER OF FURTHER WARRANTY

Ariens Company makes no warranty, express or implied, other than what is expressly made in this warranty. If the law of your state provides that an implied warranty of merchantability, or an implied warranty of fitness for particular purpose, or any other implied warranty, applies to Ariens Company, then any such implied warranty is limited to the duration of this warranty. Some states do not allow limitations on how long an implied warranty lasts, so the above limitation may not apply to you.

This warranty gives you specific legal rights, and you may also have other rights which vary from region to region.

THE KING OF SNOW®

Ariens
655 West Ryan Street
Brillion, WI 54110
920-756-4688
Fax 920-756-2407
www.ariens.com
www.ariens.com.au

⚠ WARNING ⚠

The engine exhaust from this product contains chemicals known to the State of California to cause cancer, birth defects or other reproductive harm.

An Ariens Company Brand